# ASTRAL STRIKE

MASSIVE AIR HOCKEY

## OWNER'S MANUAL

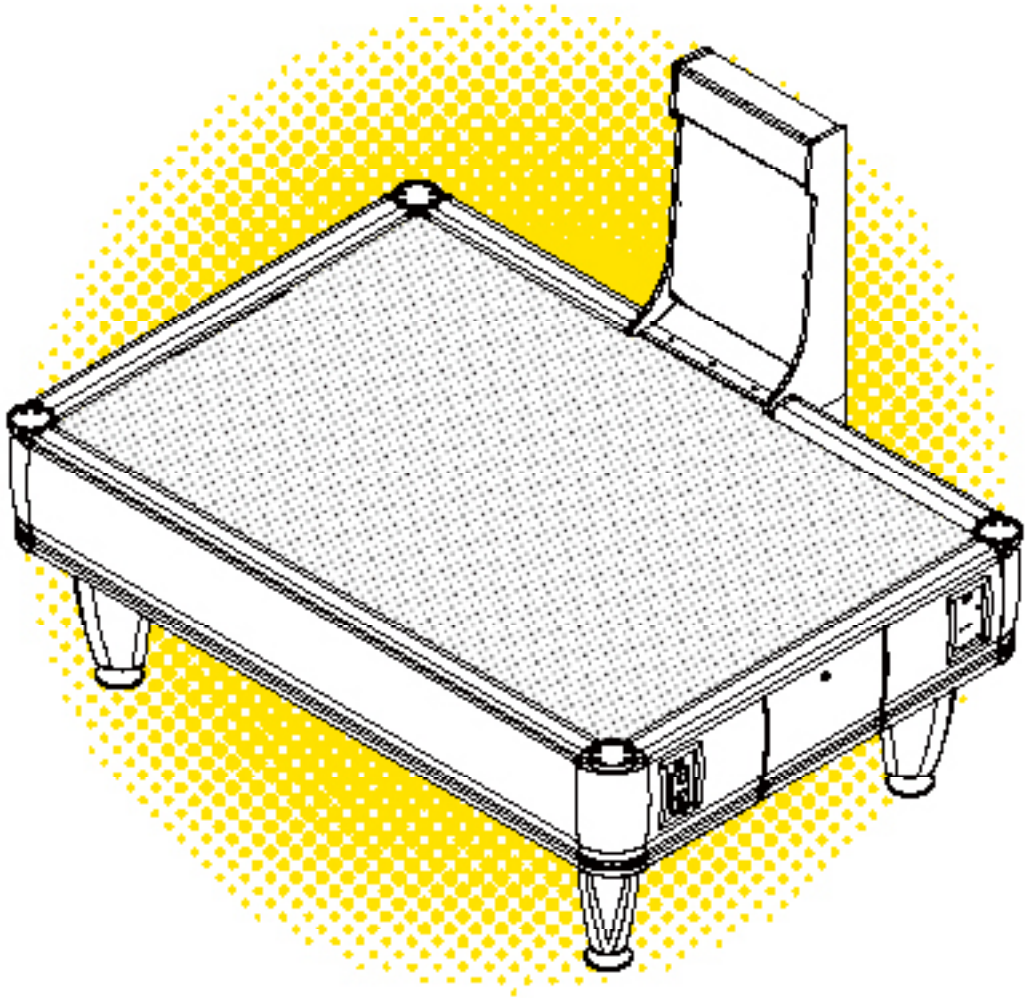

**IMPORTANT!** Before using this product, read this owner's manual carefully to understand the contents herein stated.

# BEFORE USING THE PRODUCT, BE SURE TO READ THE FOLLOWING NOTE:

To ensure the safe usage of the product, be sure to read the following note before using the product. The following instructions are intended for the users, operators and the personnel in charge of the operation of the product. After carefully reading and sufficiently understanding the warning icons, handle the product appropriately. Be sure to keep this manual nearby the product or elsewhere convenient for referring to it when necessary.

Herein, instructions which require special attention are marked with dual lines. Depending on the potentially hazardous degrees, the icons of **DANGER!**, **WARNING!**, **CAUTION!**, etc. are used. Be sure to understand the significance of the icons before reading the content.




Indicate that ignoring this icon and improper operation will result in serious injury or even life safety.




Indicate that ignoring this icon and improper operation will result in serious injury.




Indicate that ignoring this icon and improper operation will result in minor injury or product damage.




Indicate that ignoring this icon and improper operation will result in the product not functioning properly and malfunctioning.

- **Following the instructions herein stated when operating product.**
  Instructions herein would mention paying attention to the aspect of accident prevention. If you don't operate product by following instructions may cause accidents. In the case only those who have technical expertise could operate the product to avoid hazardous situation.
- **Be sure to turn off the power before operating the machine.**
  To prevent electric shock, be sure to turn off the power before operating the product. If the work should be performed in the power-on status, be sure to following the instruction herein to operate the product.
- **Be sure to use fuses which meet the specified rating. (only for the machines which use fuses)**
  Using fuses exceeding the specified rating can cause short circuited and electric shock.
- **Remove, change or add the part which is not designated by YANG GONG are not allowed.**
  It is very hazardous to operate the product by removing parts and or modifying the circuits. If door, lid or protective part is damaged or lost, power off the product and contact where the product was purchased from or the office herein stated.
- **Ensure that the product meets the requirements of appropriate Electrical Specifications.**
  Before installing the product, check for Electrical Specifications. Using any Electrical Specifications different from the designated Specifications can cause short circuited and electric shock.
- **Ensure that the Power Supply used is equipped with an Earth Leakage Breaker.**
  This product does not incorporate the Earth Leakage Breaker. Using a power supply which is not equipped with the Earth Leakage Breaker can cause short circuited when earth leakage occurs.

- **Install and operate the product in places where appropriate lighting is available, allowing warning labels to be clearly read.**

  To ensure safety for the customers, stickers describing potentially hazardous situation are applied to places where accidents may be caused. Ensure that where the product is operated has sufficient lighting allowing the warnings to be read. If any sticker is peeled off, apply it again immediately.

## INSPECTIONS IMMEDIATELY AFTER TRANSPORTING THE PRODUCT TO THE LOCATION

Normally, at the time of shipment, YANG GONG products are in a status allowing for usage immediately after transporting to the location. Nevertheless, an irregular situation may occur during transportation. Before turning on the power, check the following points to ensure that the product has been transported in a fine status.

- ☐ Are there any dented portions or defects (cuts, etc.) on the external surfaces of the cabinet?
- ☐ Do the power supply voltage and frequency requirements meet with those of the location?
- ☐ Are all wiring connectors correctly and securely connected? Unless connected in the correct direction, connector can not be connected accurately. Do not insert connectors forcibly.
- ☐ Do power cords have cuts and dents?
- ☐ Are all accessories available?

# CONTENTS


01. Precautions of installation - - - - - - - - - - - - - - - - - - - - - - - 1
02. Precautions of installation location - - - - - - - - - - - - - - - - 2
03. Precautions of gaming - - - - - - - - - - - - - - - - - - - - - - - - 3 ~ 4
04. Name of parts - - - - - - - - - - - - - - - - - - - - - - - - - - - - - - 5
05. Assembling & installation - - - - - - - - - - - - - - - - - - - - - - 6 ~13
06. Precautions when moving the machine - - - - - - - - - - - - 14
07. Game content - - - - - - - - - - - - - - - - - - - - - - - - - - - - - 15~16
08. Game setting & PCB - - - - - - - - - - - - - - - - - - - - - - - - 17~19
09. Coin selector - - - - - - - - - - - - - - - - - - - - - - - - - - - - - - 20
10. Replacement of LED lamp - - - - - - - - - - - - - - - - - - - - - - 21
11. Periodic maintenance inspection list - - - - - - - - - - - - - - - 22~26
12. Trobleshooting - - - - - - - - - - - - - - - - - - - - - - - - - - - - - 27~30
13. Install the barrier - - - - - - - - - - - - - - - - - - - - - - - - - - - 31~34

# 01. PRECAUTIONS OF INSTALLATION

When installing or inspecting the machine, be very careful of the following points and pay attention to ensure that the player can enjoy the game safely.

Non-compliance with the followg points or inappropriate handling to the cautionary matters herein stated can cause personal injury or damage to the machine.




- Before overhaul the product, be sure to turn off the power. Overhaul the product without turning the power off can cause an electric shock or short circuit.
- To avoid electric shock or short circuit, do not insert or pull out the plug quickly.
- To avoid electric shock, do not unplug with a wet hand.
- Do not expose power cords and earth wires on the surface (floor,passage, etc.). If exposed, the power cords and earth wires are susceptible to damage. Damaged cords and wires can cause electric shock or short circuit.
- To avoid causing short circuited or electric shock, do not put things on or damage power cords.
- After installing the product, do not unnecessarily pull the power cord. If damaged, the power cord can cause short circuited or electric shock.
- In case the power cord is damaged, ask for replacement through where the product was purchased from or the office herein stated. Using the cord as is damaged can cause short circuited, electric shock or leakage.
- Be sure to perform grounding appropriately. Inappropriate grounding can cause an electric shock.
- Be sure to use fuses meeting specified rating. Using fuses exceeding the specified rating can cause short circuited or electric shock.
- To avoid causing short circuited or electric shock, do not remove, change or add the part which is not designated by YANG GONG.
- Be sure to perform periodic maintenance inspections herein stated (Chapter 11).




When you clean the surface of the playfield, use soft and dry cloth. Don't use any chemicals like paint thinner or benzine.

# 02. PRECAUTIONS OF INSTALLATION LOCATION




This product is an indoor game machine. Do not install it outdoor. Even indoors, avoid installing in places mentioned below so as not to cause short circuited, electric shock, injury and or malfunctioning.

- High humidity area such as indoor pool or shower room.
- Place exposed to direct sunlight or high temperature.
- Place filled with inflammable gas, highly inflammable / volatile chemicals or hazardous matter.
- Dusty places.
- Sloped surfaces.
- Place that is susceptible to any type of external force
- Near fire facilities, such as fire exits and fire extinguishers
- The operating (ambient) temperature range is from 10°C to 35°C.

## LIMITATIONS OF USAGE REQUIREMENTS




- Be sure to check the electrical specifications. Ensure that this product is compatible with the location's power supply, voltage and frequency requirements. A plate describing electrical specifications is attached to the product. Non-compliance with the electric specifications can cause short circuited or electric shock.
- This product requires the breaker and earth mechanisms as part of the location facilities. Using them in a manner not independent can cause short circuited and electric shock.
- Ensure that the indoor wiring for the power supply is rated at 7A or higher (AC single phase 100~120V area), and 5A or higher (AC 220~240V area). Non-compliance with the electrical specifications can cause short circuited and electric shock.
- Be sure to independently use the power supply equipped with the earth leakage breaker. Using a power supply without the earth leakage breaker can cause short circuited when earth leakage occurs.
- Putting many loads on one electrical outlet can cause generation of heat and a fire resulting from overload.
- When using an extension cord, ensure that the cord is rated at 15A or higher (AC 100~120V area) and 15A or higher (AC 220~240V area). Using a cord rated lower than the specified rating can cause short circuited and electric shock.

# 03. PRECAUTIONS OF GAMING

For the safe operation of the product, be sure to comply with the following precautions.

## BEFORE STARTING OPERATION

In order to avoid accidents, check the following matters before starting the operation:

- Check if all the adjusters are in contact with the surface. If the adjusters are not in contact with the surface, the cabinet can move and cause an accident.
- Check whether the game machine is level or not.

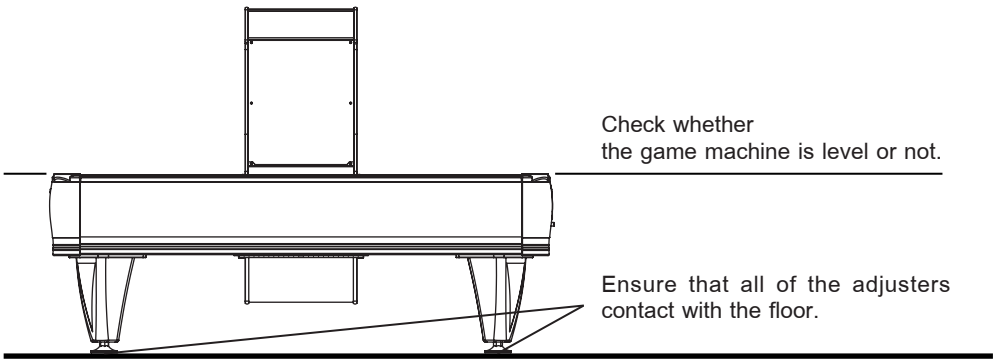


WARNING!

- Do not put any heavy item on this product. Placing any heavy item on the product can cause falling down accidents or parts damage.
  Do not climb on the product. Climbing on the product can cause falling down accident. If you intend to to check the top of the product, please use a ladder.
- To avoid electric shock, please check if door or cover parts are damaged or missing.
- To avoid electric shock, short circuit or parts damage, do not put the following items near by the product.
  [ Flower vases, flower pots, cups, water tanks, cosmetics and receptacles/containers/ vessels containing chemicals or water. ]

CAUTION!

To avoid injury, be sure to provide sufficient space by considering the potentially crowded situation at the installation location. Insufficient installation space can cause the player to come into contact with or hit the others and result in injury or trouble.

IMPORTANT!

Mallets and pucks could be taken away. Keep mallets and pucks in an appropriate place as much as possible so that the staff can watch them from been take away.

## PAYING ATTENTION TO PLAYERS

To avoid injury and trouble, be sure to constantly pay attention to the behavior and manner of the pedestrians and players.

WARNING!

- To avoid electric shock and short circuit, do not allow players to put hands and fingers or extraneous matter in the gaps of the product or small gaps around the doors.
- To avoid falling down and be injured, immediately stop the players from leaning against or climbing on the product.
- To avoid electric shock and short circuit, do not allow the players to unplug the power plug without a proper reason.
- To avoid injury from falling down, and electric shock due to spilled drinks, instruct the player not to place heavy items or drinks on the product.

CAUTION!

- Immediately stop such violent acts as hitting and kicking the product. Such violent acts can cause parts damage or falling down resulting in injury.
- Instruct those who wear high-heeled shoes from not to playing the game by explaining that playing game with high-heeled shoes would cause potentially hazardous situation.



- To avoid injury, do not allow the players to put their hands on the playfield.
- Ensure that the player holds the handle of the mallet. Playing by holding the outer part of mallet (which would directly contact with the puck when hitting) can cause injury.

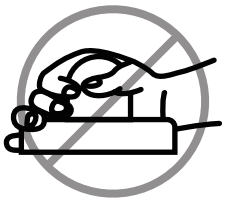

IMPORTANT!

Instruct the player not to put beverages on the playfield. Spilled drinks can infiltrate into the wooden board of the machine and cause the wooden board to be deformed, resulting in unsatisfactory playing.

# 04. NAME OF PARTS

## ISOMETRIC VIEW

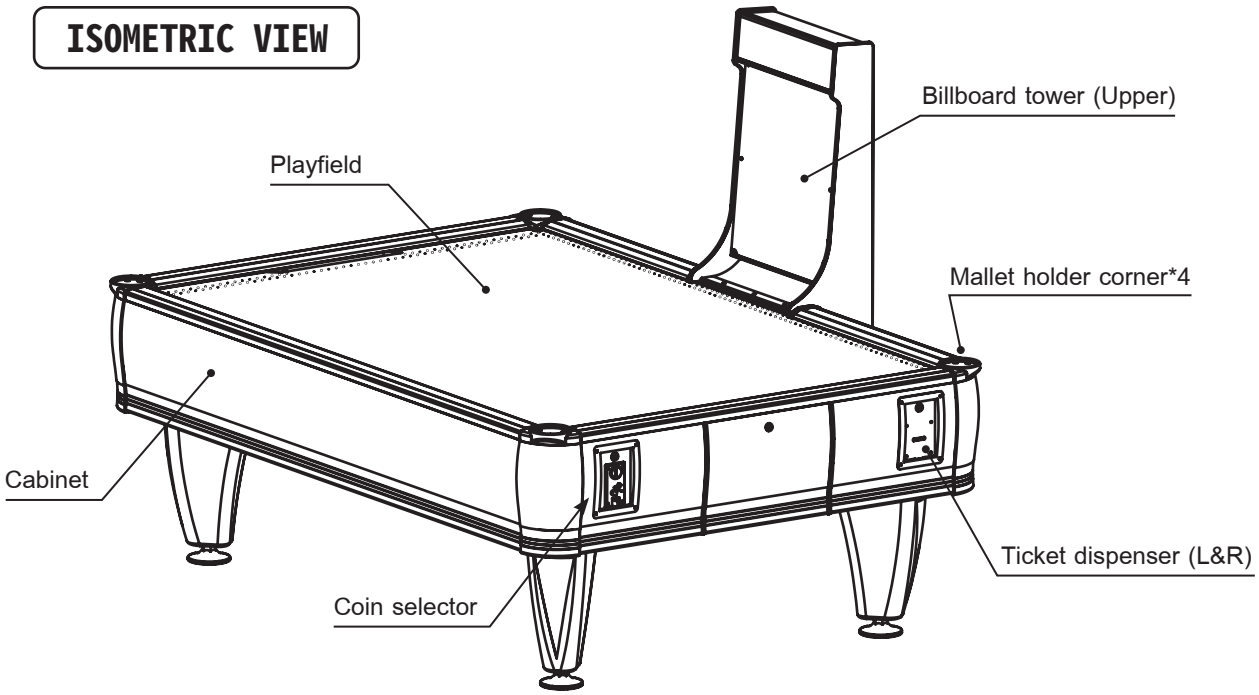


## BACK VIEW

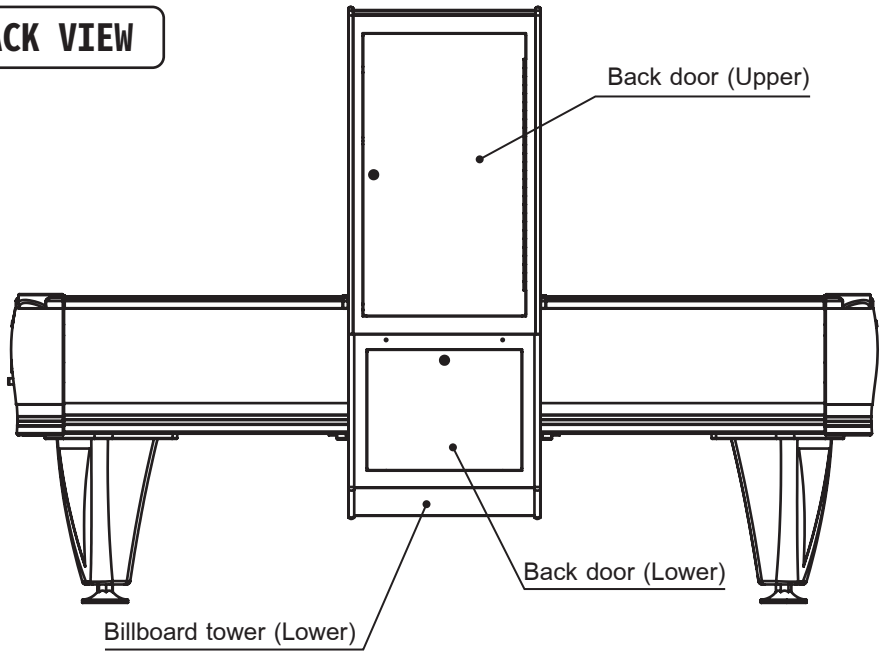


| | Width | | Length | | Height | (mm) |
|---|---|---|---|---|---|---|
| Cabinet | 1530 | X | 2230 | X | 790 | |
| Billboard tower | 680 | X | 500 | X | 1320 | |
| When assembled | 1700 | X | 2230 | X | 1540 | |

# 05. ASSEMBLING & INSTALLATION

WARNING!

- Please follow the steps described here to assemble the product. Failing to comply with the instructions, for example, inserting the plug into an outlet at the stage not mentioned in this manual can cause an electric shock accident.
- Please follow this manual to assembly. Since this is a complex machine, erroneous assembling can cause damage to the machine or malfunction to occur.
- When assembling, please be sure to work by multiple people. Depending on the assembly work, in some cases, performing work by one person may result in personal injury or component damage.

When performing the assembly, please follow the 8 steps below to follow the sequence :

1. **UNBOX & TAKE OUT THE PARTS FROM THE CABINET**
2. **INSTALL THE LEGS OF THE CABINET & MOUNTING BRACKET**
3. **REVERSE THE CABINET & REMOVE THE BOX**
4. **INSTALL THE BILLBOARD TOWER (UPPER, LOWER)**
5. **STEADY THE MACHINE (ADJUSTER ADJUSTMENT)**
6. **PLACE THE PUCKS AND MALLETS**
7. **INSERT THE PLUG**
8. **INITIALIZING**

When assembling, the key (an accessory) and level are needed in addition to such tools as a Philips screwdriver, wrench.

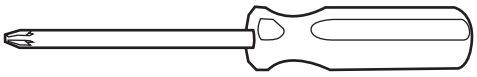

Philips screwdriver

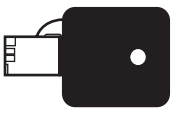

Key

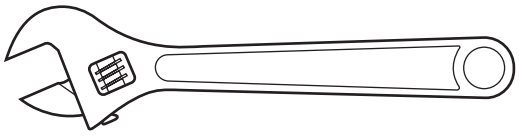

Wrench

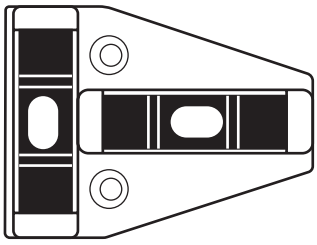

Level

## 1 UNBOX & TAKE OUT THE PARTS FROM THE CABINET

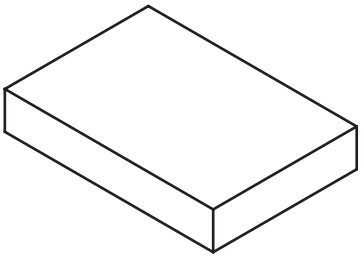

① Box
2300*1600*380 (mm)
Weight : 193.5kg

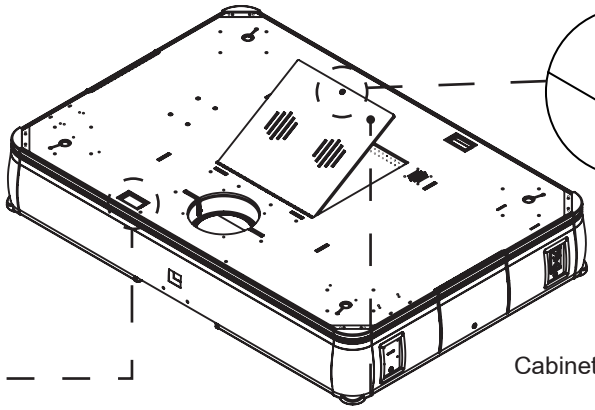

Cabinet (1)

| Parts | Quantity |
|---|---|
| Key | 3 |
| Pan head screw (M8*30) | 16 |
| Washer (M8*Ø16) | 16 |
| Pan head screw (M8*16) | 8 |



Cleaning rod (1)

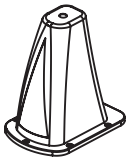

Leg (4)



Adjuster (4)

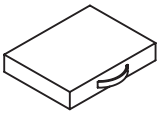

Accessory box (3)

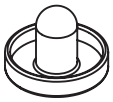

Mallet (8)



Puck (64)

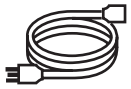

Power cord (1)

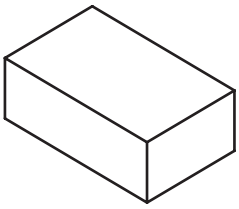

② Box
940*345*590 (mm)
Weight : 22.5kg

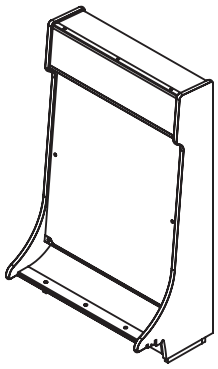

Billboard tower (Upper) (1)

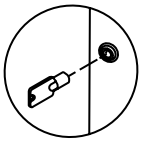

<Open the back door>

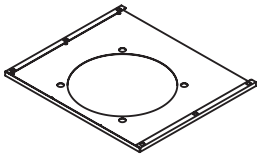

Mounting bracket (1)

| Parts | Quantity |
|---|---|
| Hexagon socket head screw (M5*30) | 2 |
| Phillips screw (M4*12) | 2 |
| Wing nut bolt (M8*25) | 2 |
| Washer (Ø5*Ø10) | 2 |
| Washer (M8*Ø19) | 2 |

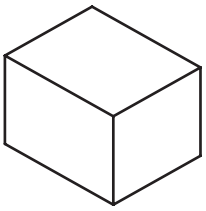

③ Box
715*525*590 (mm)
Weight : 20kg

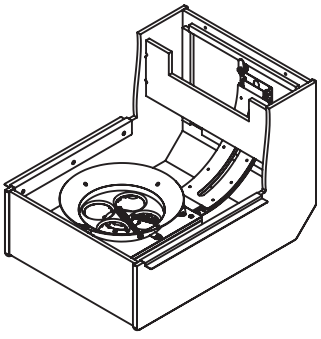

Billboard tower (Lower) (1)

## 2 INSTALL THE LEGS OF THE CABINET & MOUNTING BRACKET

① Installing the adjusters to 4 legs.

② Using 16 pan head screws (M8*30) ,16 M8 spring washers and M8*Ø16 washer to install the legs.

③ Using 8 pan head screws (M8*16) to install the mounting bracket to the cabinet.

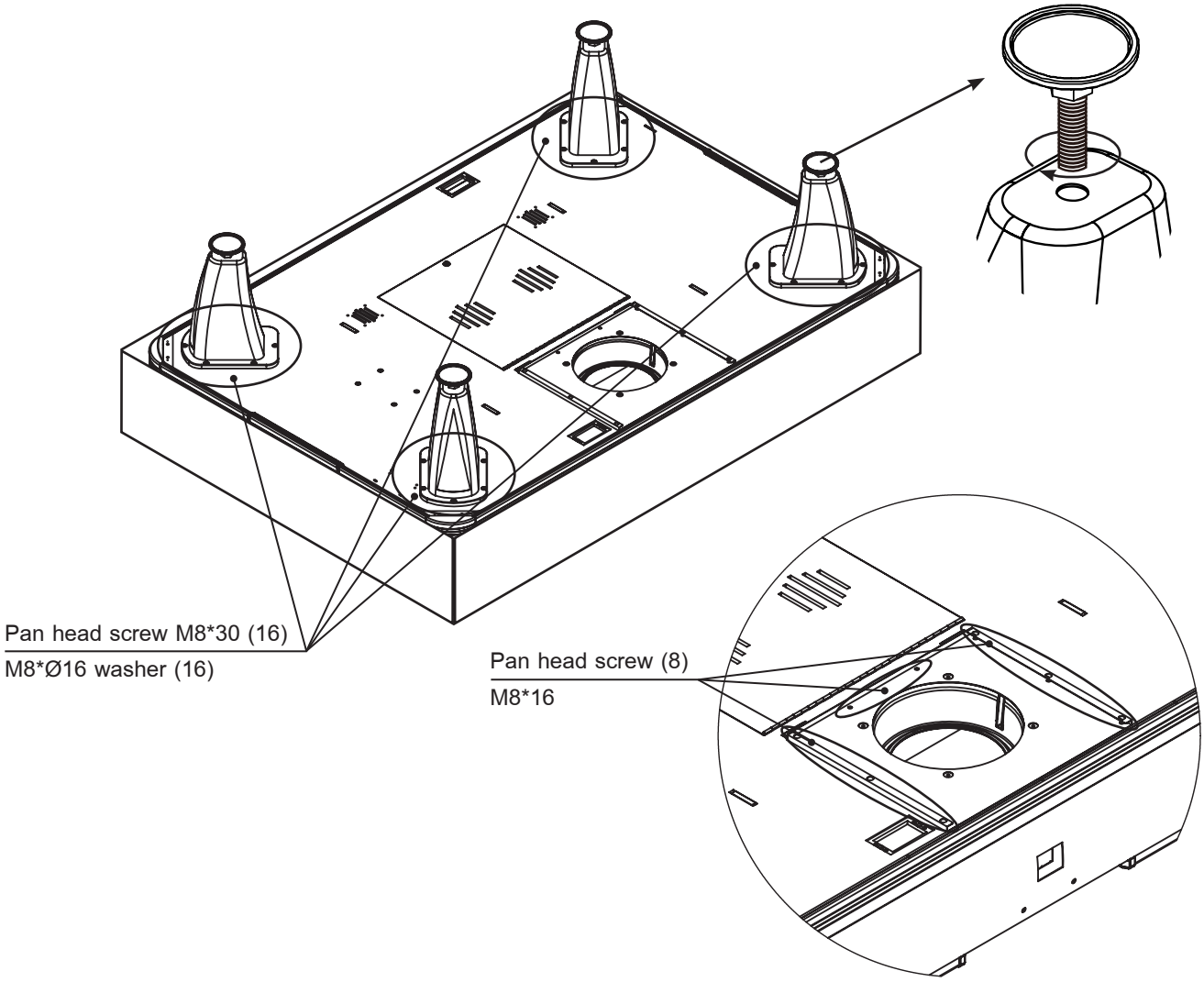


## 3 REVERSE THE CABINET & REMOVE THE BOX

< 3~4 PEOPLE ARE NEEDED WHEN TURNING THE MACHINE >

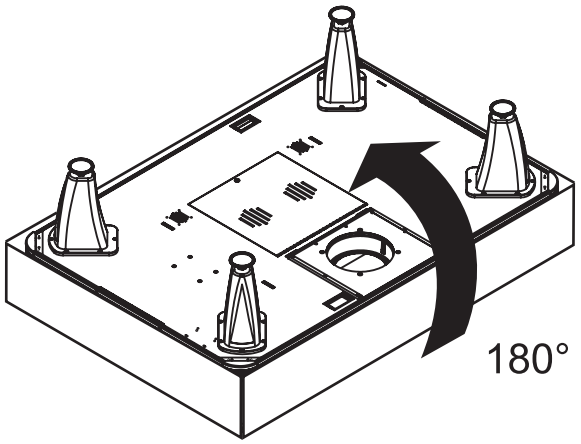

## 4 INSTALL THE BILLBOARD TOWER (UPPER, LOWER)

① Combine the billboard tower (Lower) with the cabinet.

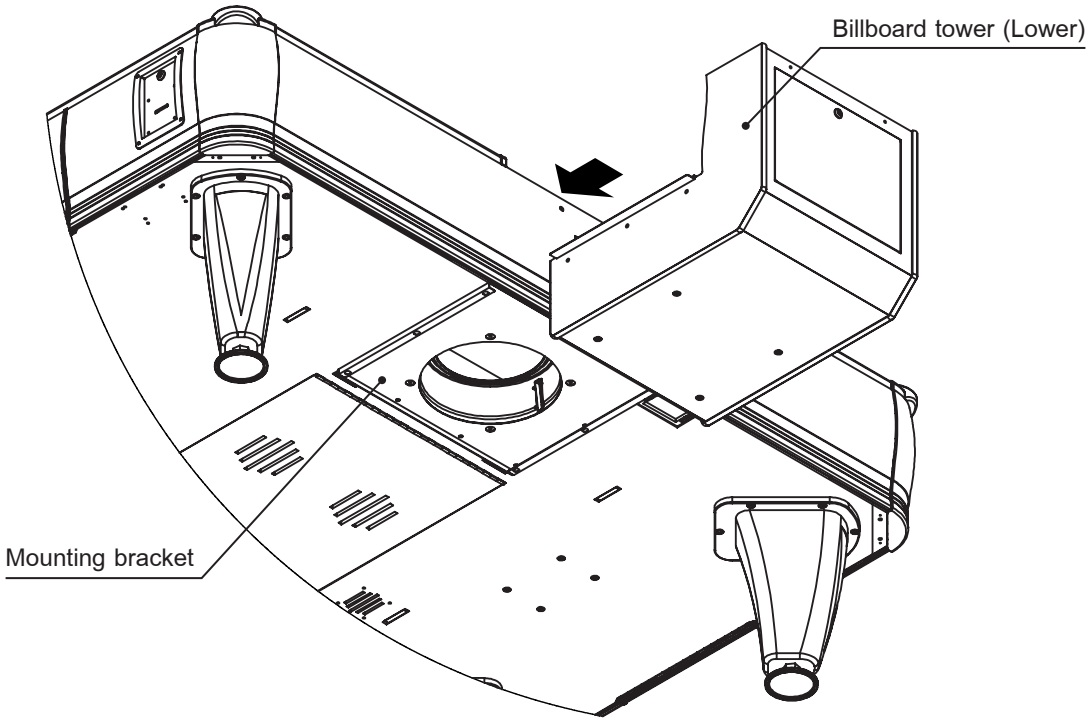


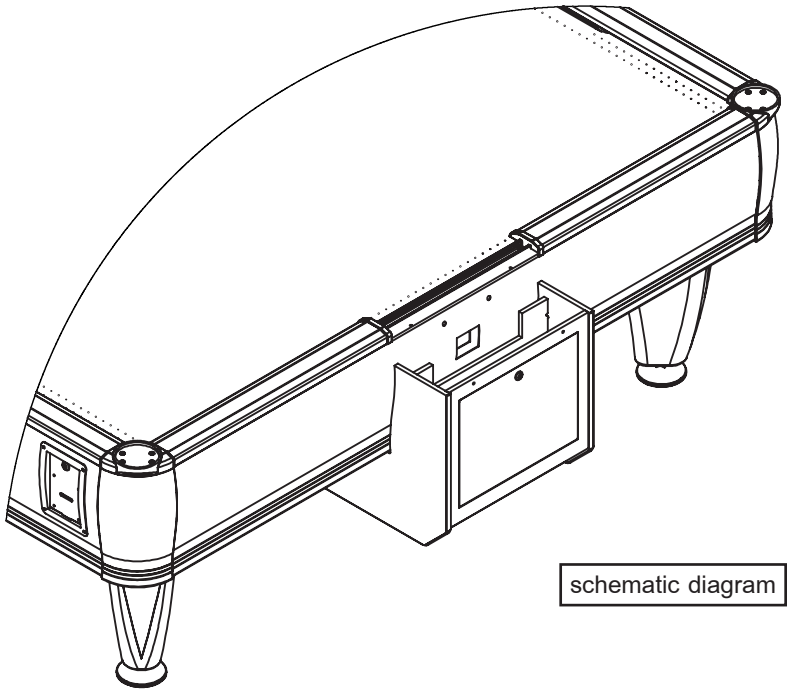

schematic diagram

② Combine the billboard tower (Upper) with the billboard tower (Lower) and the cabinet .

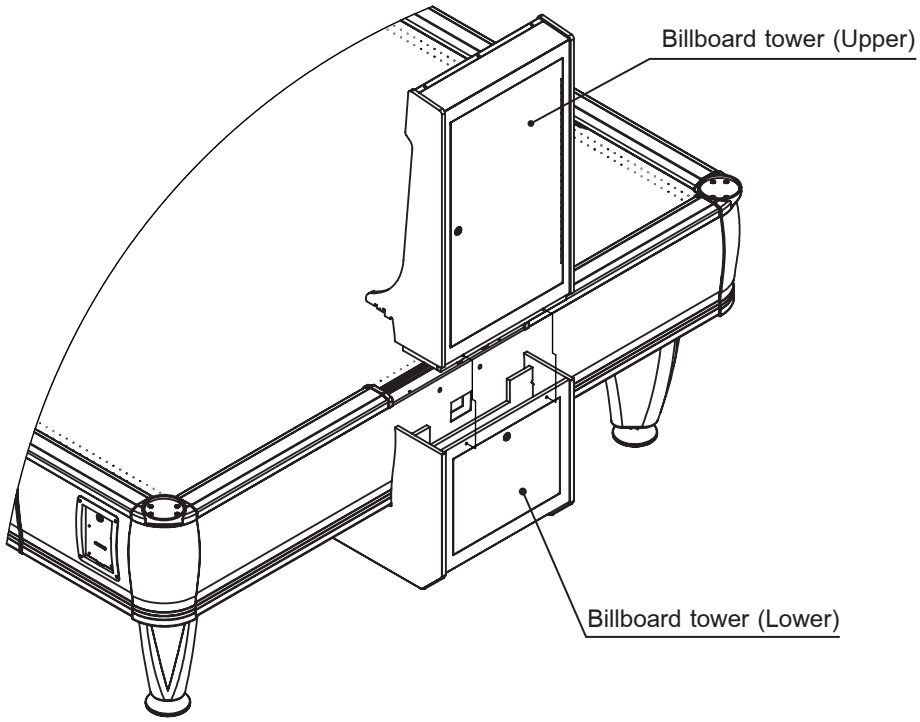


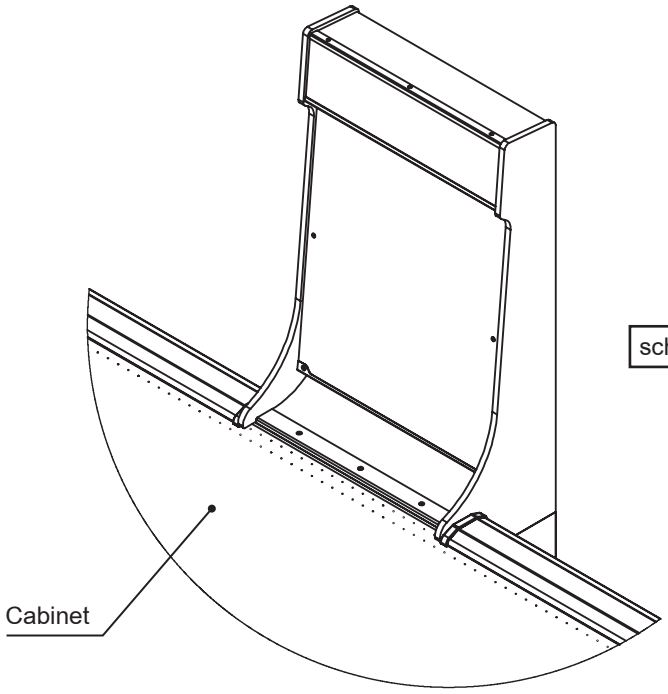


schematic diagram

③ Using 2 hexagon socket head screws (M5*30) and 2 washers (Ø5*Ø10) to combine billboard tower (Upper) with billboard tower (Lower).

**Be sure to raise billboard tower (Lower) before locking the screw (IMPORTANT).**

④ Using 2 Phillips screws (M4*12) to combine puck-feeding track (Upper) with puck-feeding track (Lower).

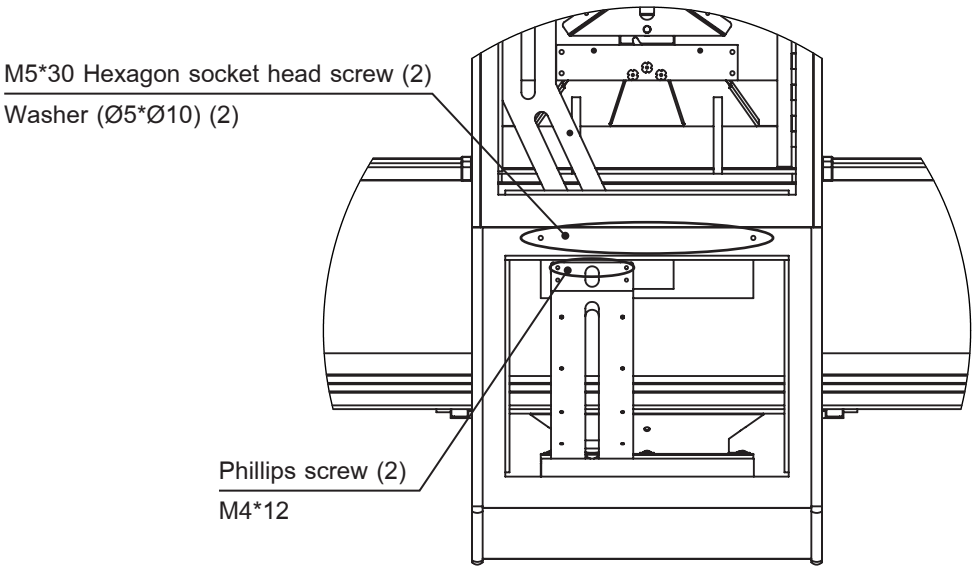


⑤ Using 2 M8*25 wing nut bolts and 2 M8*Ø19 washers to lock billboard tower (Upper) on the cabinet.

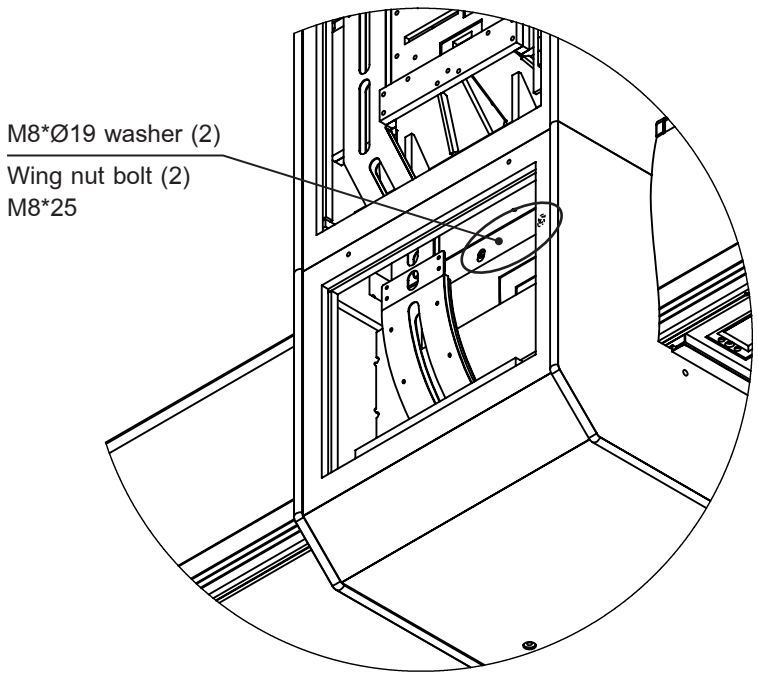

## 5 STEADY THE MACHINE (ADJUSTER ADJUSTMENT)

WARNING!

Make sure that all of the adjusters are in contact with the floor. If they are not, the cabinet may move and cause an accident.

This machine has 4 adjusters. When the Installation position is decided, make sure that the adjusters are in contact with the floor directly and the position of the machine is level.

① Bring the product to the location and level the machine by turning the adjusters.【Pic.01】

② Apply a level on the playfield to check horizontality.

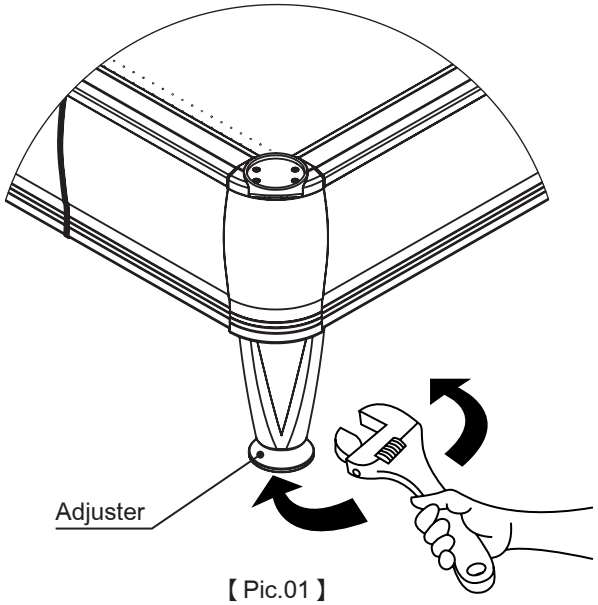


【Pic.01】

## 6 PLACE THE PUCKS AND MALLETS

IMPORTANT!

Do not put more than 50 pucks in the product. Ensure that the minimum and maximum numbers of pucks in the product are between 35 to 50. Putting more than 50 pucks in the product can cause malfunctioning and machine damage.

① Put 24 pucks for each of the home side & guset side goals.

② Put 4 mallets in place at the 4 mallet holder comers.

※ **It is strictly forbidden to use a puck which is not for this product. Using a puck which is not for this product will cause the machine to operate abnormally. If you accidentally put a puck which is not for this product and make the puck stick in the puck track, please read <REMOVE FOREIGN MATTER IN THE PUCK TRACK> on pages 29 and 30 to remove it. < IMPORTANT >**

## 7 INSERT THE PLUG & EARTH CONNECTION

WARNING!

Ensure that the power cord with earth pin is not exposed on the surface (passage, etc.). If exposed, they can be damaged easily. If damaged, the cord and wire can cause an electric shock or short circuit. Ensure that the wiring position is not on the passage or the wiring has protective covering.

Open the billboard tower (Lower). In the billboard tower (Lower)【Pic.02】there are 3 sets of plug from billboard tower (Upper), billboard tower (Lower) and cabinet. Please follow【Plug comparison table】to connect all 3 sets of plug.

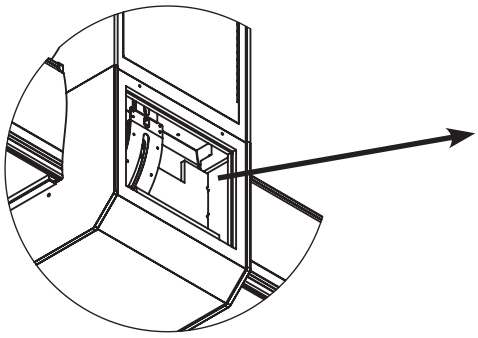

【Pic.02】

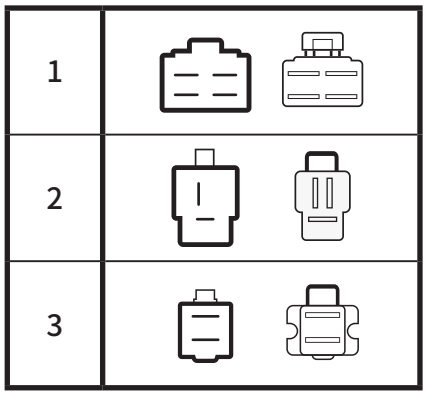


【Plug comparison table】

## 8 INITIALIZING

Turn the power on by turning the main switch on. The LED lamp in the billboard tower lights up and standby state BGM is emitted. The scoreboard and decorative lights located below the billboard will display the cycle number.

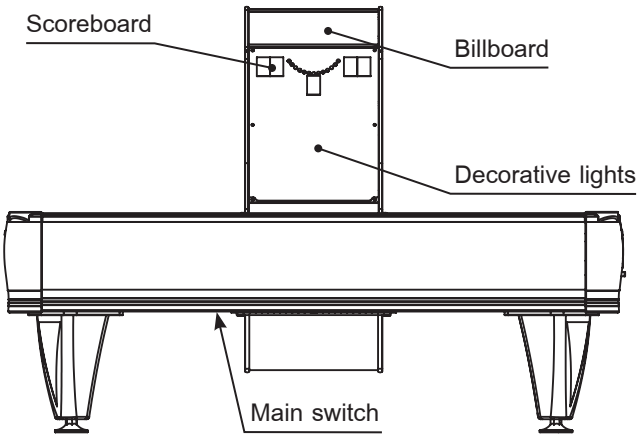


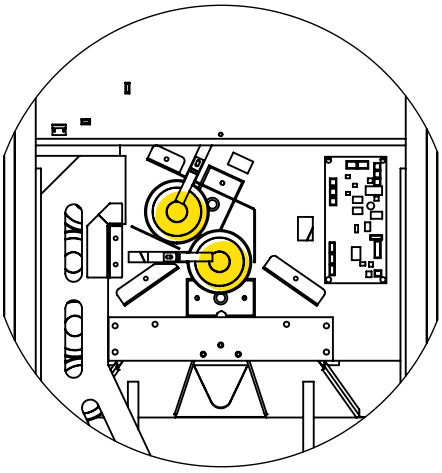

【Pic.03】

This product would be initialized automatically after turing on the power. When initialization is completed, there will be 2 pucks placed in the Y-track behind the billboard tower (Upper)【Pic.03】. If you want to test the machine, please read Section 9 before adjusting the settings.

# 06. PRECAUTIONS WHEN MOVING THE MACHINE

WARNING!

- When moving the machine, be sure to pull out the plug from the power supply. Moving the machine with the plug inserted can damage the power cord and cause short circuited or electric shock.
- When lifting the cabinet, be sure to hold the bottom part. Lifting the cabinet by holding other parts can damage machine and cause injury.
- The weight of this product is 220 kg. Be sure to hold the bottom part of the cabinet by 4 or more people to move the product.

CAUTION!

If the doors or entrance is narrow, be sure to separate the billboard tower and the cabinet. Please follow the instructions below to dismantle carefully.

## DISASSEMBLY SEQUENCE

When disassembling the machine, please remove the pucks in the puck-feeding track inside the machine first, and then remove the wires that are related to the upper and lower parts of the billboard tower.

① Take out the pucks. You need to press the solenoid valve to let the puck pass, and remove the wires related to the upper and lower parts of the billboard tower before loosen M4 Phillips screws (2).

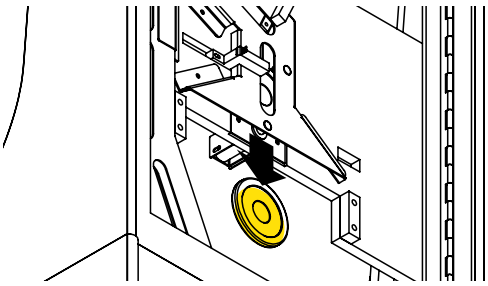

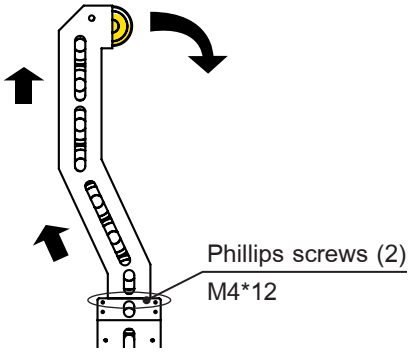


② Loosen M5 Phillips screws (2) and wing nut bolts (2) to remove the billboard tower (Upper).

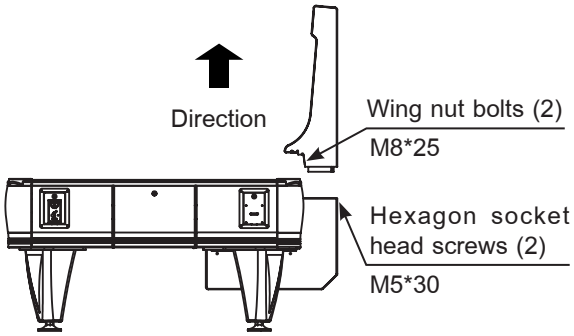


③ Remove the billboard tower (Lower).

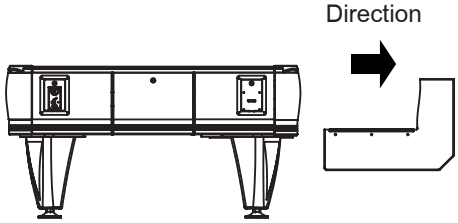

# 07. GAME CONTENT

The following instructions apply to the normal operation of the product. If any action other than the following occurs, it may indicate that some kind of failure has occurred. Immediately check the cause of the fault and eliminate it to ensure that the machine is functioning properly.

The LED lamp in the billboard tower is always lighted when energized. During standby state, the scoreboard of the billboard tower repeats displaying numbers in series of loops, and the background music (BGM) is emitted from the speaker.

① Input coin(s) and coin inserted sound will be emitted. The game will start automatically when player insert sufficient coins. Up to 9 rounds can be counted on the scoreboard at a time.

② When game starts, 1~3 pucks will be served randomly from the billboard tower. During the game, the scoreboard displays score and the remaining time.

③ When the game starts, the standby BGM changes to the in-game BGM.

④ Aiming at the opponent's goal, players hit the puck with mallet. When puck hits the side wall of playfield, the reverberating sound will be emitted.

⑤ When a puck enters the goal, the player earns one point and the scoreboard displays the score.

⑥ After Step ② ,when one puck enters the goal, 1~3 pucks are served randomly from the billboard tower and the game will follow this rule until the game ends.

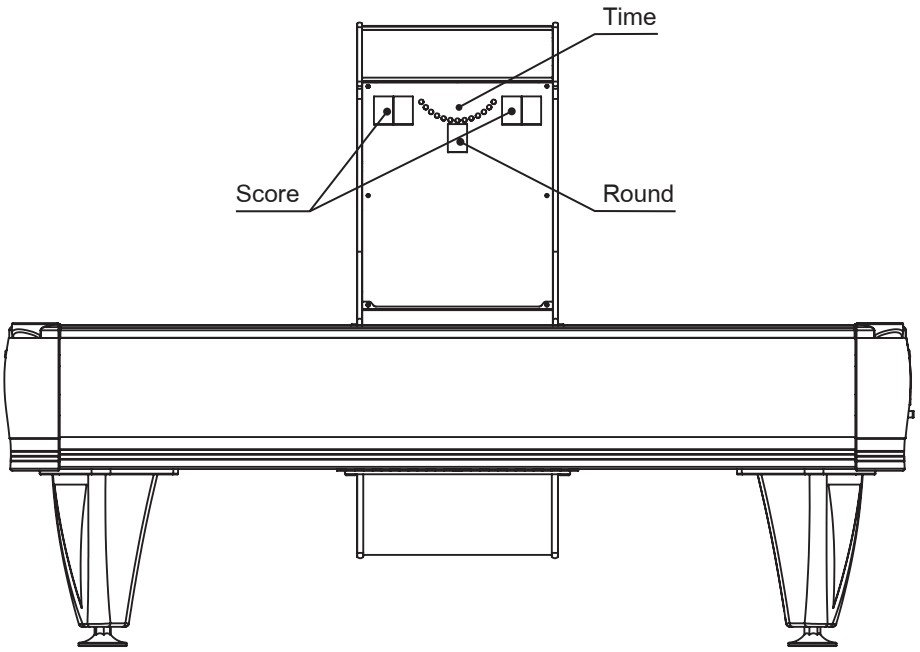

⑦ The sum of the pucks on the playfield and the score of the player with the highest score will be less than or equal to the end game score.

⑧ When the game is 10 seconds remaining, the in-game BGM stops and plays the countdown sound.

⑨ When the countdown sound is over, the game ends and a "GAME OVER" sound will be emitted from the machine and the player with the highest score wins.

⑩ If a player reaches the end game score before the game time is over, the player wins and a "GAME OVER" sound will be emitted from the machine and the game ends.

⑪ After one game is finished with some credits still remaining, if all of pucks enter the goal, the game will proceed to the next round. Even if not all of the pucks enter the goal, when credits still remain, the game will still proceed to the next round.

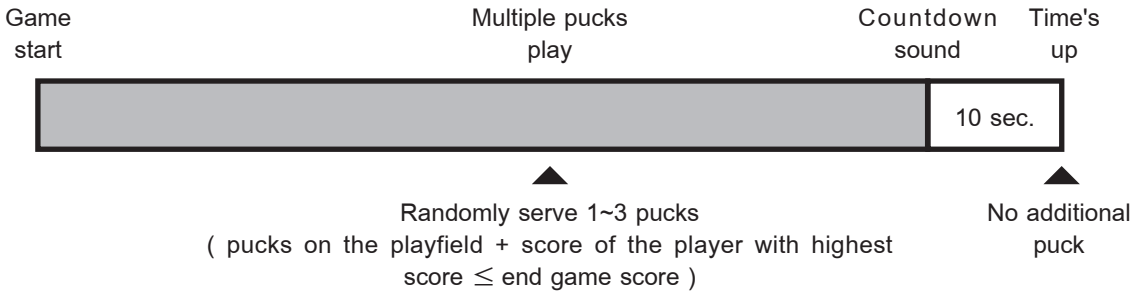


## RECOMMENDED GOAL SETTING

| Time (Sec.) / Setting | 60 | 90 | 120 | 150 | 180 |
|---|---|---|---|---|---|
| **End game score ( 1 puck 1 point )** | 12 | 21 | 30 | 35 | 40 |
| **Maximum number of pucks on the playfield** | 10 | | | | |

# 08. GAME SETTING & PCB

WARNING!

- In order to prevent an electric shock and short circuit, be sure to turn the power off before performing work by touching the interior parts of the products.
- Be careful so as not to damage wirings. Damaged wiring can cause an electric shock or short circuit accident.

## CONTROL PANEL

Please open the left door of the cabinet and there is a control panel which can be pull out.

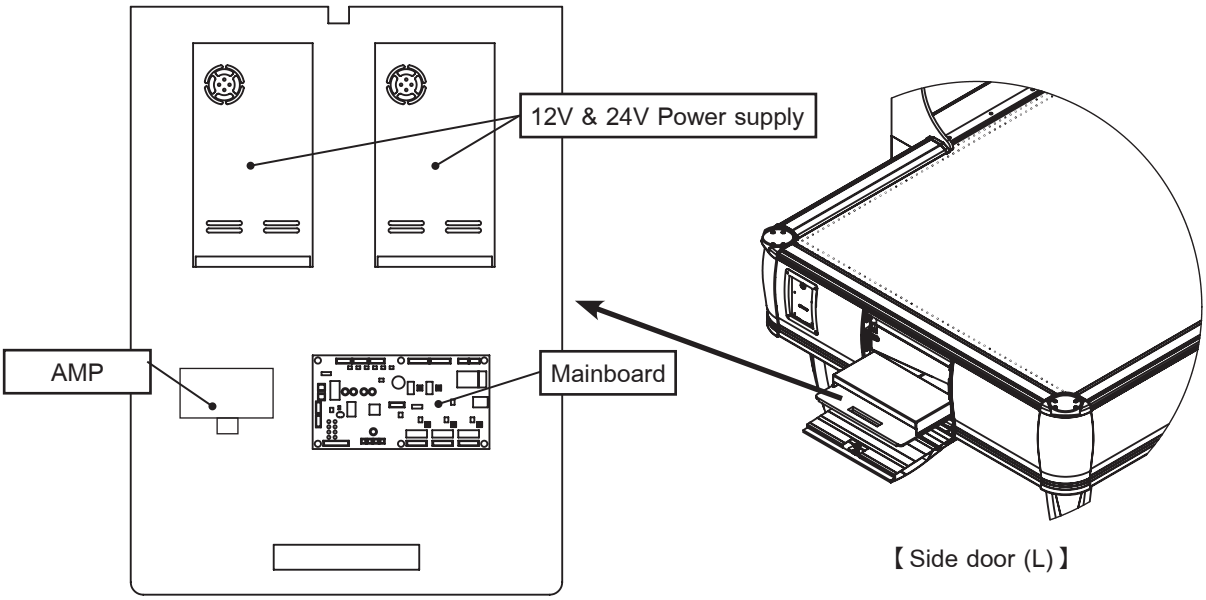


【Control panel】

【Side door (L)】

## MAINBOARD

The LED light on the mainboard will show the electronic parts which have been connected. You can check whether the electronic parts have been connected with the table below.

**LED Light :**

| 1P Card | 2P Card |
|---|---|
| Puck card | N/A |
| N/A | N/A |
| Scoreboard | N/A |

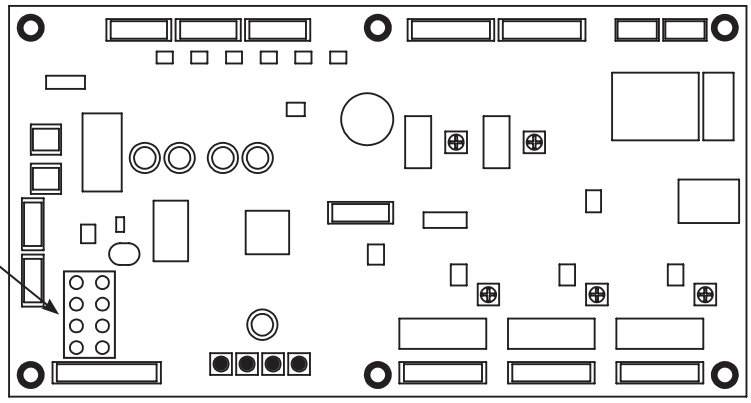

【Mainboard】

## SETTING MODE

Set up the game machine with 4 buttons on the mainboard and the table below.

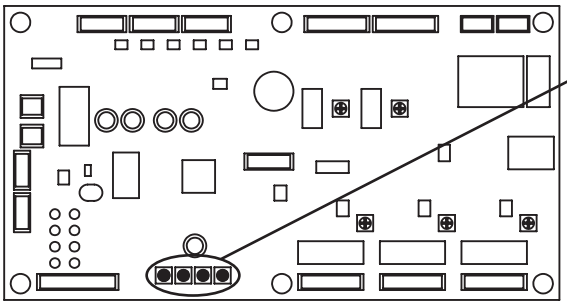

【Mainboard】

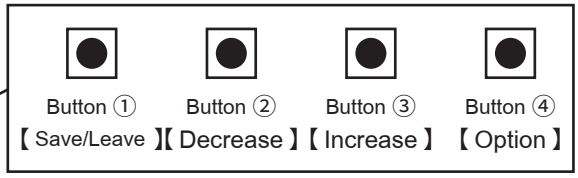


※ In non-setting mode / no game, press button ③ to play the game 1 time without coin.

※ In non-setting mode / no game, press and hold button ② down to display total number of coins on the scoreboard.

**1** **Press button ① +button ④ simultaneously to enter the setting mode.**

**2** **Please use the table below to use the button ② and ③ to increase or decrease the value of the item, and use the button ④ to switch the item.**

**3** **When finishing the setting, please press button ① to confirm & exit setting mode.**

| Symbol on scoreboard | Meaning of symbol | Adjustment range |
|---|---|---|
| P1 | Coin insertion | 1~10 |
| P2 | Round | 1~10 |
| P3 | Arcade tickets (Winner) | 0~50 |
| P4 | Arcade tickets (Loser) | 0~50 |
| P5 | Change reverberating sound | 1~3 |
| P6 | End game score (1 puck=1 point) | 1~50 |
| P7 | Time (min.) | 1~30 |
| P8 | Standby BGM | Y (Yes) / N (No) |
| P9 | NC / NO Machine operation | NC / NO |
| PA | RGB light switching speed (Legs) | 1~250 |
| Pb | N / A | N / A |
| PC | The maximum number of pucks on the playfield during the game | 1~10 |
| Pd | The maximum number of pucks when the game begins | 1~3 |
| PE | Game mode selection | 1~2 |

※ Game mode <PE-1>: In the normal way of playing, there will be no remaining puck on the table at the end of the game.

※ Game mode <PE-2>: In the normal way of playing, there will be a maximum number of pucks set by <PC> on the playfield until the end of the game.

※ Only when set to game mode <PE-2>, <PB> will be displayed.

## AMP

Music power amplifier, often abbreviated as "amplifier" or "amp," is an electronic device used to amplify the power of music signals, enabling it to drive speakers and produce greater volume and higher sound quality.

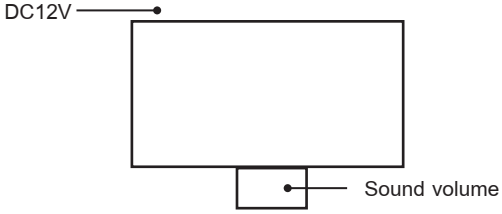


【AMP】

## 1P/2P CARD

According to the position, please follow the instruction in【Pic.04】to remove the specified ticket dispenser or coin selector. **<u>After operation, make sure that the wire of the ticket dispenser is not lying on the puck track to interfere with pucks. < IMPORTANT ></u>**

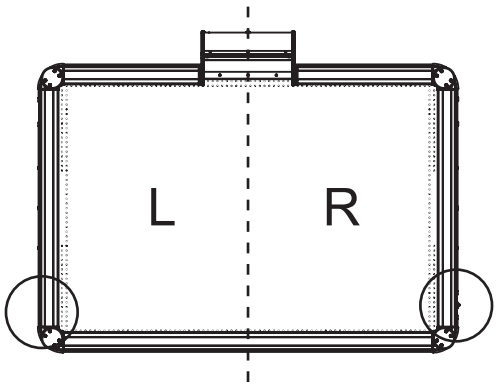


【Pic.04】

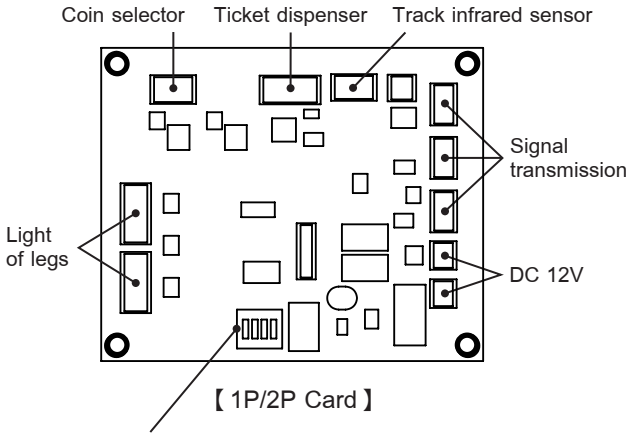


【1P/2P Card】

DIP Switch (Top:ON, Bottom:OFF)

| | |
|---|---|
| 1P | Switch 1 ON, others OFF |
| 2P | Switch 2 ON, others OFF |

## PUCK CARD

Please open the door of the billboard tower (Upper) and there is a puck card in it.【Pic.05】

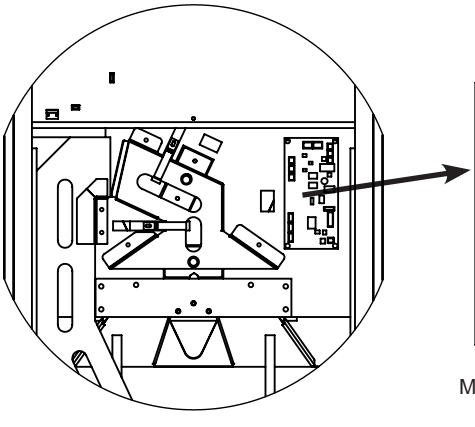

【Pic.05】

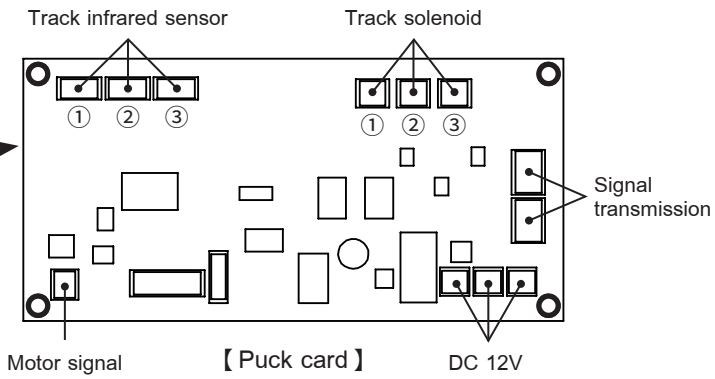


【Puck card】

# 09. COIN SELECTOR

## HANDLING THE COIN JAMMED

If the coin is not rejected when the REJECT button is pressed, open the coin chute door and open the selector gate. After removing the jammed coin, insert a regular coin and check whether the coin selector functions correctly.

## CLEANING THE COIN SELECTOR

The coin selector should be cleaned every month. When cleaning, please follow the steps below :

① Turn the power of the machine off and open the coin chute door.

② Seperate the coin selector and frame board and dust off with a soft brush.

③ Clean dirt with a soft cloth moistened with water or diluted chemical cleaner.

④ After step ③ , using a dry cloth to dry the coin selector completely.

IMPORTANT!

- Never apply machine oil to the coin selector.
- After cleaning the coin selector, insert a regular coin in the normal working status and check whether the coin selector functions correctly.

## COIN INSERTION TEST

Every time when performing the Coin Insertion Test, please check the following points :

☐ Does the coin selector count normally?

☐ Does the coin drop into the cashbox correctly?

☐ Is the coin rejected after inserted while keeping the reject button pressed down?

# 10. REPLACEMENT OF LED LAMP

WARNING!

- Before performing the work, be sure to turn the power off. Working with power on can cause an electric shock or short circuit accident.
- The LED lamp, when it gets hot, can cause burns. Be very careful when replacing the LED lamp.

CAUTION!

To perform work safely and securely, be sure to prepare a step which is in a secure and stable condition. Not using a step or using an unstable step can cause a falling down accident.

## REPLACEMENT OF LED LAMP

① Turn the power switch off.

② Take out the 3 M3*12 cross recessed countersunk head tapping screws and remove billboard.

③ Open the back door (Upper) and remove the wire of the LED lamp and replace it.

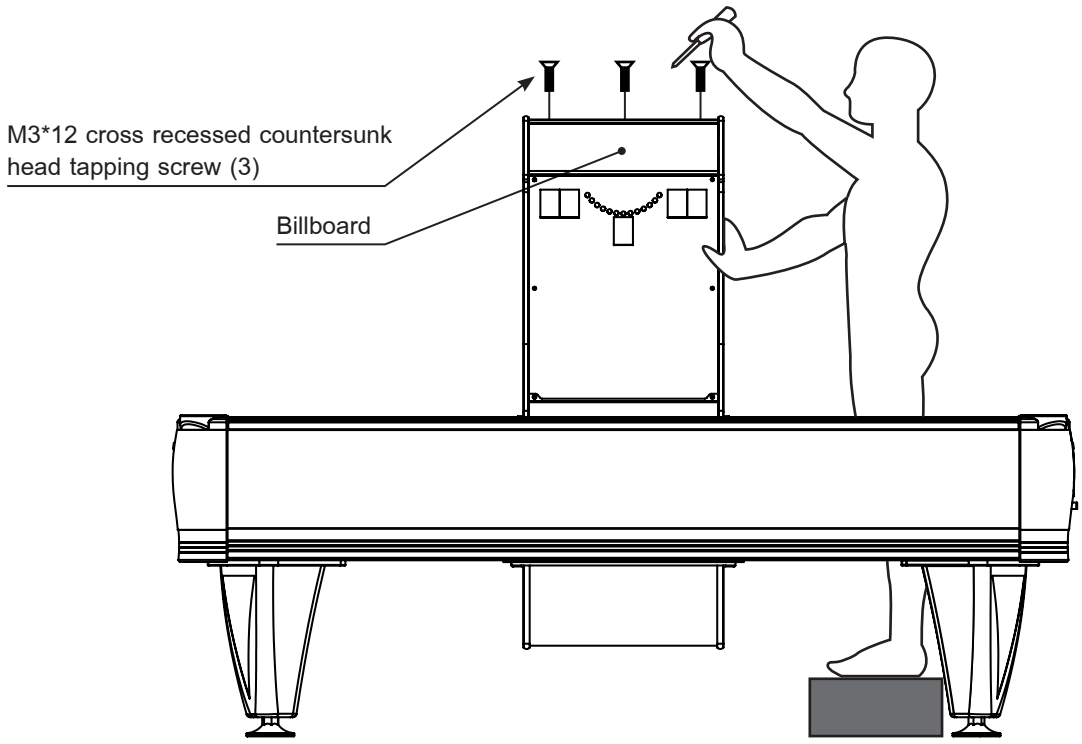

# 11. PERIODIC MAINTENANCE INSPECTION LIST

In order to maintain the performance of this product and ensure the safe operation, be sure to check and perform the following maintenance list regularly.




- Be sure to check every month to see if power cords are damaged, the plug is securely inserted, dust is accumulated between the socket outlet and the power plug, etc.. Using the product with dust as is accumulated can cause short circuited or electric shock.
- Be sure to do the interior cleaning every month. Using the product with dust as is accumulated in the interior without cleaning can cause short circuited or accident.




Taking food and drink on the playfield is strictly prohibited. If beverage is spilled, please wipe it off immediately. Leaving spilled juice, etc. without wiping off would make the beverage come inside through the air outlet holes and infiltrating into the woodwork. This may cause the playfield to be warped and result in an unsatisfactory playing. Instruct the players not to put food and drinks on the playfield.

| | Item | Interval | Reference |
|---|---|---|---|
| **Pucks & mallets** | Check the number of pucks | Monthly | Chapter 6 < Disassembly sequence > |
| | Clean the pucks and mallets | Monthly | Page 23 |
| **Playfield** | Surface cleaning & waxing | Weekly | |
| | Horizontal adjustment | Monthly | |
| | Check air outlet holes | Monthly | |
| **Billboard tower** | Clean puck-feeding track | Monthly | |
| | Clean puck-feeding machine | Monthly | Page 24 |
| **Coin selector** | Clean & check coin selector | Monthly | Chapter 9 |
| **Interior** | Clean puck track | Monthly | Page 25,26 |
| | Clean & check | Monthly | See above |
| **Power supply plug** | Clean & check | Monthly | |

## CLEAN THE PLAYFIELD

- Once every week, be sure to wipe off playfield surface with alcohol or a neutral glass cleaner.
- Do not use silicon, wax or anything that might block air outlet.
- If the air outlet is blocked, cleaning it with a thin item like a safety pin.
- When checking the air outlet, slide the puck over the playfield with the blower operating. If the puck slides smoothly, it is satisfactory. If the puck is stopped on the playfield, using the safety pin, etc. through the air outlet several times and then slide the puck again to ensure the puck is not caught on the playfield.
- **After cleaning the playfield, wax it to keep the surface smooth for the regular gameplay. < IMPORTANT >**

## CLEAN THE MALLETS AND PUCKS

When badly soiled, the puck will not slide smoothly and the game can not be played satisfactorily. Cleaning by wiping off with alcohol or neutral detergents. If soils can not be removed, replace the puck.

## CLEAN THE PUCK-FEEDING TRACK

If the puck-feeding track is heavily soiled, it will cause additional resistance to the puck-feeding motor and shorten the life of the motor when pucks are being transported. clean the following parts with a air pressure gun and neutral detergent.

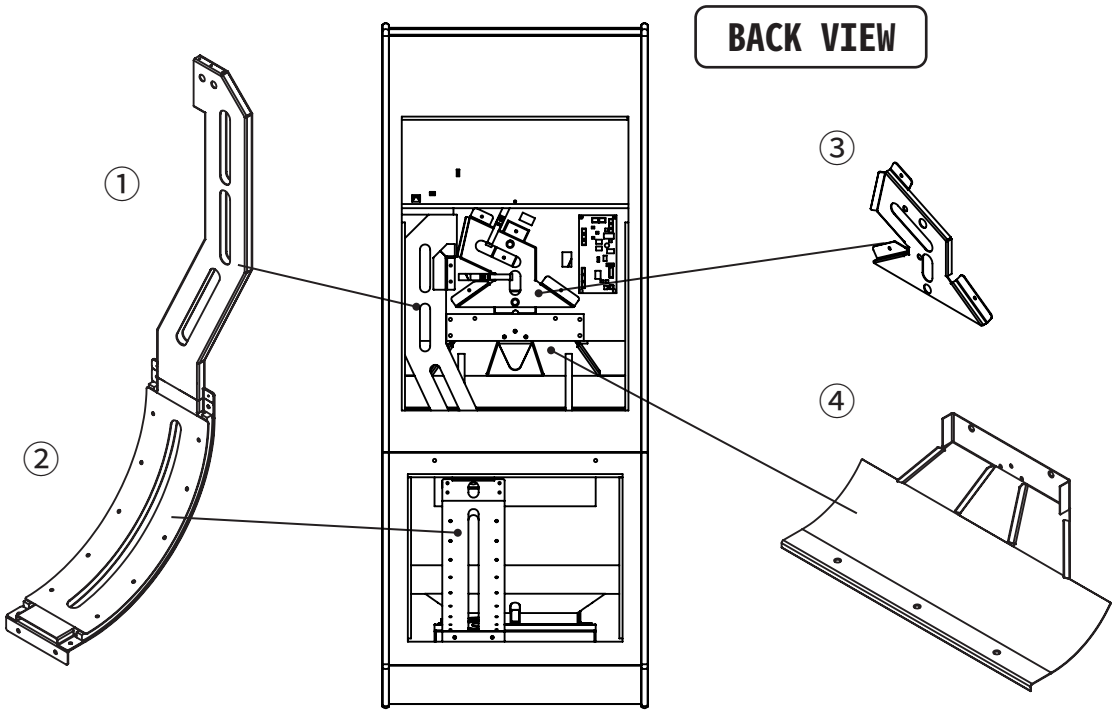


【Billboard tower】

## CLEAN PUCK-FEEDING MACHINE

Please clean the puck-feeding machine every month.

① Turn the power switch off.

② Disassemble the billboard tower. (Chapter 6 < Disassembly sequence >)

③ Disassemble the puck-feeding machine from the billboard tower (Lower).【Pic.06】

④ Remove parts of the puck-feeding machine and then clean dirt with a soft cloth moistened with water or diluted chemical cleaner.【Pic.07】

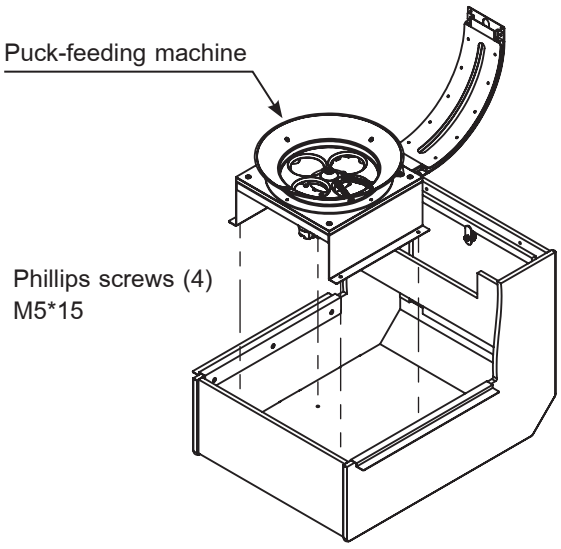


【Pic.06】

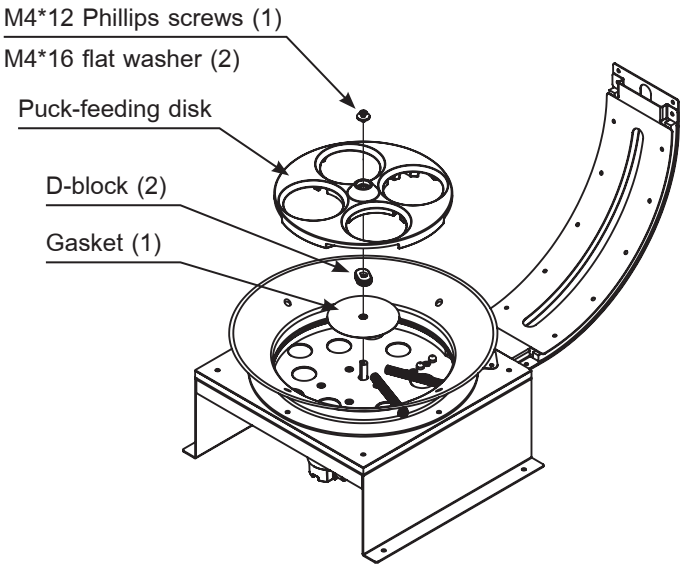


【Pic.07】

**WARNING!**

- In order to prevent an electric shock and short circuit, be sure to turn the power off before performing work by touching the interior parts of the product.
- Be careful not to damage wirings which can cause an electric shock or short circuit.
- Do not touch places other than those specified. Touching places not specified can cause an electric shock or short circuit accident.

**CAUTION!**

- Hot motor can cause burns. Use care so as not to touch the hot motor.
- Be careful not to be clamped in the machine when testing motors or solenoids.

## CLEAN PUCK TRACK (METHOD 1)

Please clean the puck track every month.

① Turn the power switch off.

② Please use the key to remove the ticket dispenser.【Pic.08】

③ After removing 1 Phillips screw M4*12, take out the ticket box from the cabinet.【Pic.09】

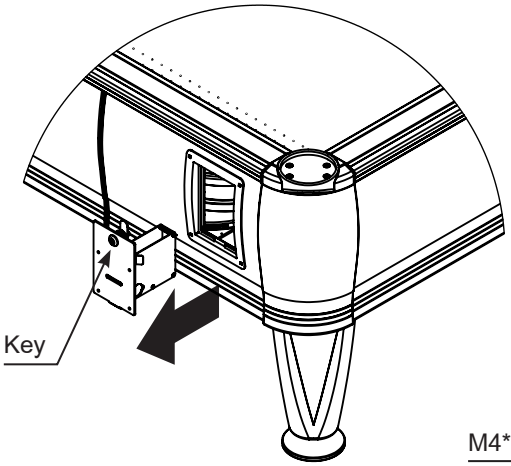


【Pic.08】

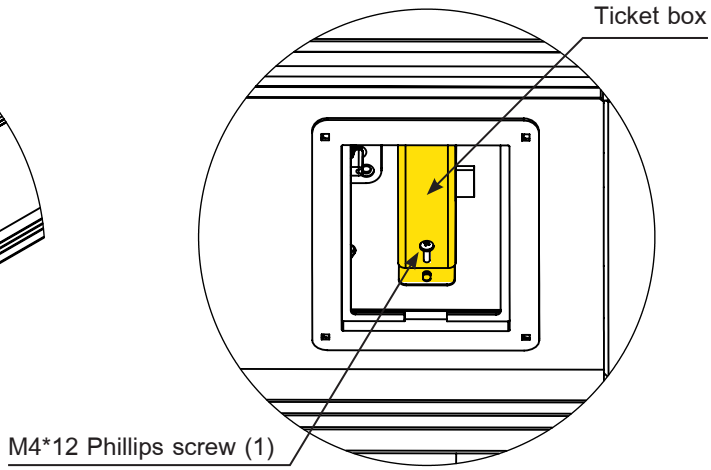


【Pic.09】

④ After removing 2 Phillips screws M4*12, take out the puck track ③ and clean it up.【Pic.10】

**<u>After cleaning up, make sure that the wire of the ticket dispenser is not lying on the puck track to interfere with pucks. < IMPORTANT ></u>**

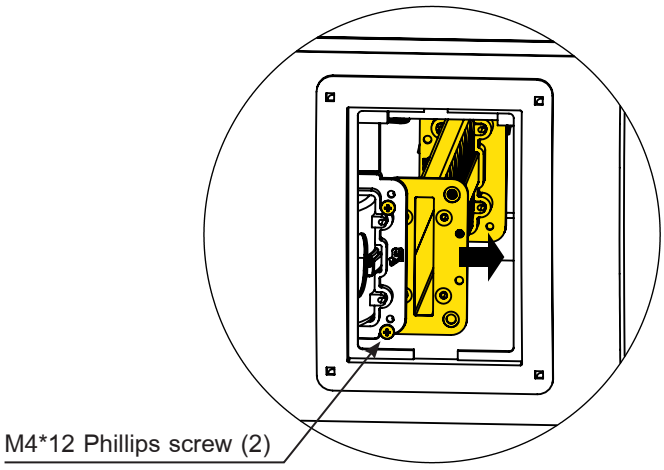


【Pic.10】

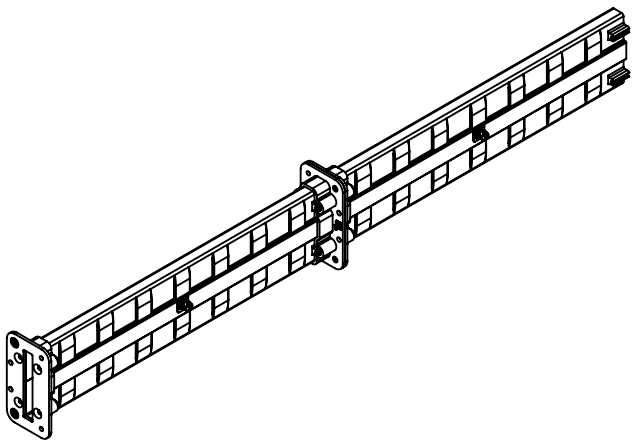

【Puck track ③】

## CLEAN PUCK TRACK (METHOD 2)

Please clean the puck track every month.

① Turn the power switch off.

② Please use the key to remove the ticket dispenser.【Pic.08】

③ Prepare the cleaning rod with a soft and thin cloth on it.【Pic.11】

④ Use the cleaning rod to clean up the puck track ③ .【Pic.12 】

**After cleaning up, please follow page 24 < CLEAN PUCK-FEEDING MACHINE > to fully finish the cleaning job. < IMPORTANT >**

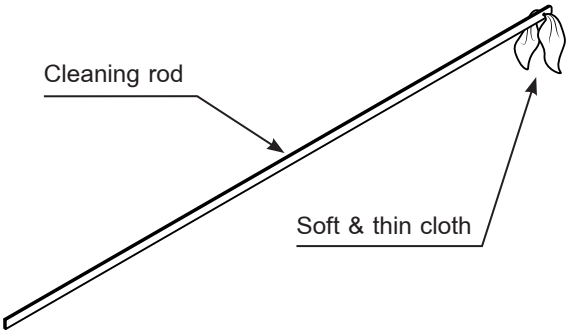


【Pic.11】

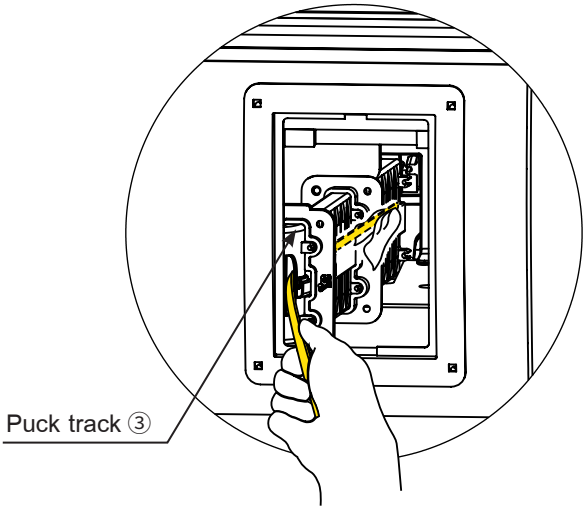


【Pic.12】

⑤ After removing the part of the puck track ( Phillips screw M4*12 ), use the cleaning rod to clean up the puck track ① & ② .【Pic.13 】

**After cleaning up, make sure that the wire of the ticket dispenser is not lying on the puck track to interfere with pucks. < IMPORTANT >**

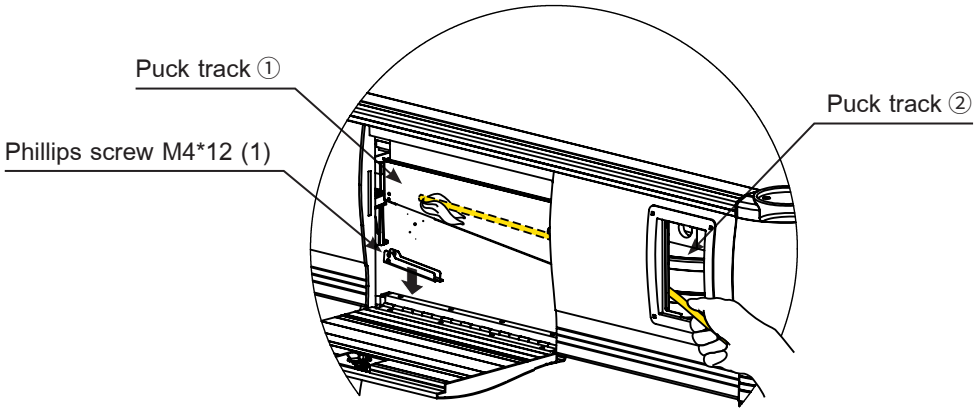


【Pic.13】

# 12. TROUBLESHOOTING

WARNING!

When performing the operation check, opening the door when the machine is powered or the parts are exposed may cause electric shock or accidents between the mechanical parts.

## ERROR MESSAGE

When there is a problem during the operation of this product, the error message will be displayed on the scoreboard of the billboard tower.

| Error message ( ☒ = no light) | Cause | Countermeasure |
|---|---|---|
| 06 - ☒☒<br>Puck card not connected | Wire of puck card is loose | Connect the wire of puck card firmly |
| 06 - 01<br>Puck isn't transfer to the position | Pucks in the machine is insufficient<br>Motor of puck-feeding machine is damaged | Add enough pucks to the machine ( 7 of Chapter 5 )<br>Replace the motor of puck-feeding machine |
| 06 - 02<br>Solenoid valve failed | Solenoid is stuck or damaged | Clean or change the solenoid valve |
| 06 - 03<br>Solenoid valve failed | Motor reversal | When foreign objects get stuck, do no turn on the machine before it finishes cleaning. |
| 06 - 04<br>Solenoid valve failed | Motor communication wires should be disconnected. | Motor needs to be replaced if the motor is burnt. |
| 1P - ☒☒<br>1P card (coin) not connected | Wire of 1P card (coin) is loose | Connect the wire of 1P card (coin) firmly |
| 2P - ☒☒<br>2P card (coin) not connected | Wire of 1P card (coin) is loose | Connect the wire of 2P card (coin) firmly |
| H1 - ☒☒<br>1P card (armrest) not connected | Wire of 1P card (armrest) is loose | Connect the wire of 1P card (armrest) firmly |
| H2 - ☒☒<br>2P card (armrest) not connected | Wire of 2P card (armrest) is loose | Connect the wire of 2P card (armrest) firmly |

## TROUBLESHOOTING

Sometimes a problem occurring when the machine is operating can not be displayed on the scoreboard. When this happens, please refer to the table below to assist with troubleshooting.

| Trouble | Cause | Countermeasure |
|---|---|---|
| When the main SW is turned on, the machine is not activated. | The power is not on.<br>Incorrect power source/voltage.<br>AC unit circuit protector functioned due to instantaneous overcurrent. | Firmly insert the plug into the outlet.<br>Make sure that the power supply & voltage are correct.<br>Check circuit protector. Remove the cause of overload to reinstate the circuit protector. |
| The lamp lights up but nothing is displayed on the scoreboard. | Scoreboard is damaged. | Replace scoreboard. |
| When the game is started, the puck(s) does not come. | Setting of puck(s) is incorrect. | Perform INITIALIZING.<br>( 7 & 8 of Chapter 5 ) |
| No sound. | The volume of switch unit is minimum. | Set adequate sound volume. |
| The LED lamp doesn't turn on. | The LED lamp is damaged.<br>The life of LED lamp is over. | Replace LED lamp. (Chapter 10) |
| The puck enters the goal but didn't get a score. | The scoring sensor is damaged.<br>Foreign matter exists in the Goal. | Replace sensor.<br>Remove the foreign matter. (Page 29) |
| Pucks do not move within the machine. | Foreign matter exists, or several pucks are piled up on top of another and jammed. | After remove the goal cover or ticket dispenser, remove the pucks or foreign matter. (Page 29,30) |
| The puck(s) comes out only from one side. | The dividing part in the billboard (Top) is stuck with a puck. | After remove the parts mentioned by【Pic.08】, remove the puck which is stuck. (Page 30) |
| No air blowing out. | Blower is damaged. | Replace blower. |

## REMOVE FOREIGN MATTER IN THE PUCK TRACK (Goal)

① According to the position of the problem, please use the key to open the specific door mentioned in 【Pic.14】.

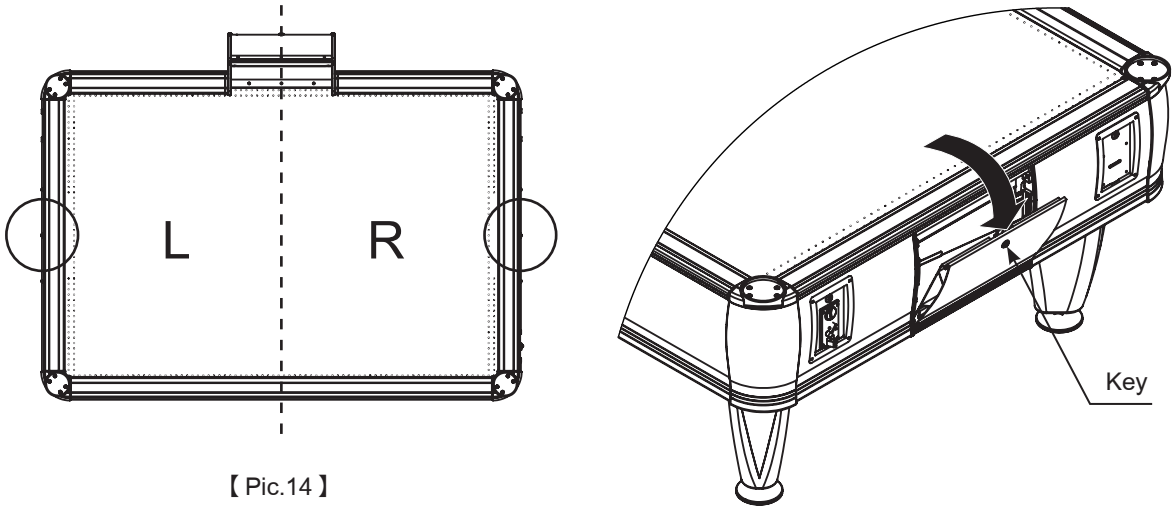


【Pic.14】

② Remove the part of the puck track ( Phillips screw M4*12 ) and remove the pucks or foreign matter.

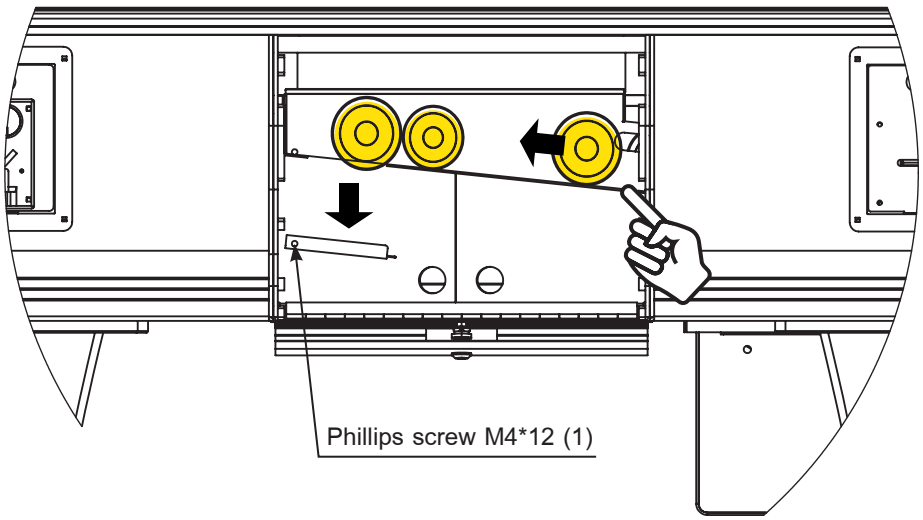

## REMOVE FOREIGN MATTER IN THE PUCK TRACK (Corner)

According to the position of the problem, please follow the instruction in【Pic.15】to remove the specified ticket dispenser. **After cleaning up, make sure that the wire of the ticket dispenser is not lying on the puck track to interfere with pucks. < IMPORTANT >**

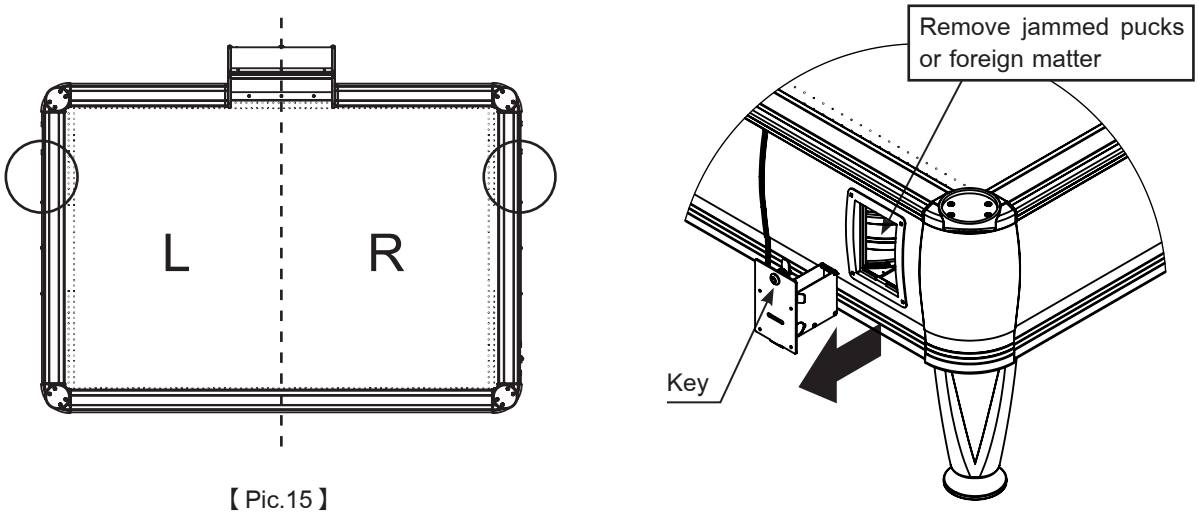


【Pic.15】

## SOLUTION IF DIVIDING PART IS STUCK

After removing the parts mentioned in【Pic.16】, remove the puck which is stuck with dividing part. When finishing removing, please check whether the dividing part can spin smoothly or not before assembling the parts.

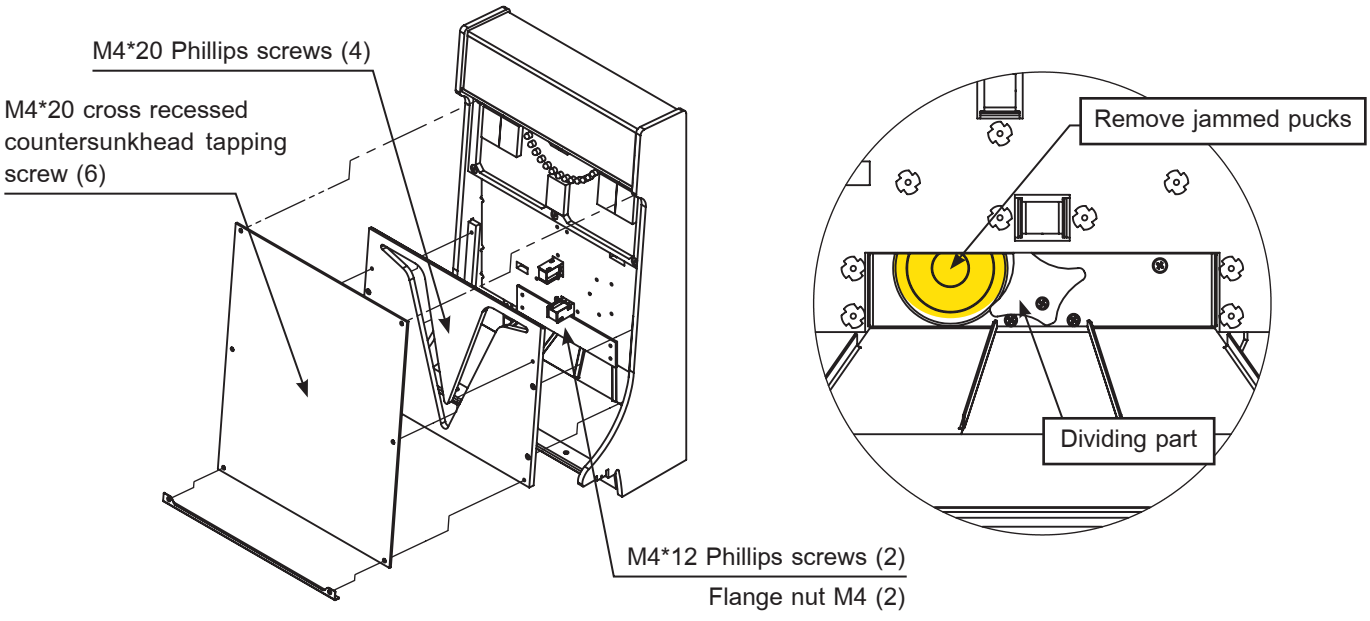


【Pic.16】

# Have fun !

**ASTRAL STRIKE /**
**MASSIVE AIR HOCKEY**



