CLASSIC HOCKEY

RESIDENTIAL AIR HOCKEY

OWNER'S MANUAL

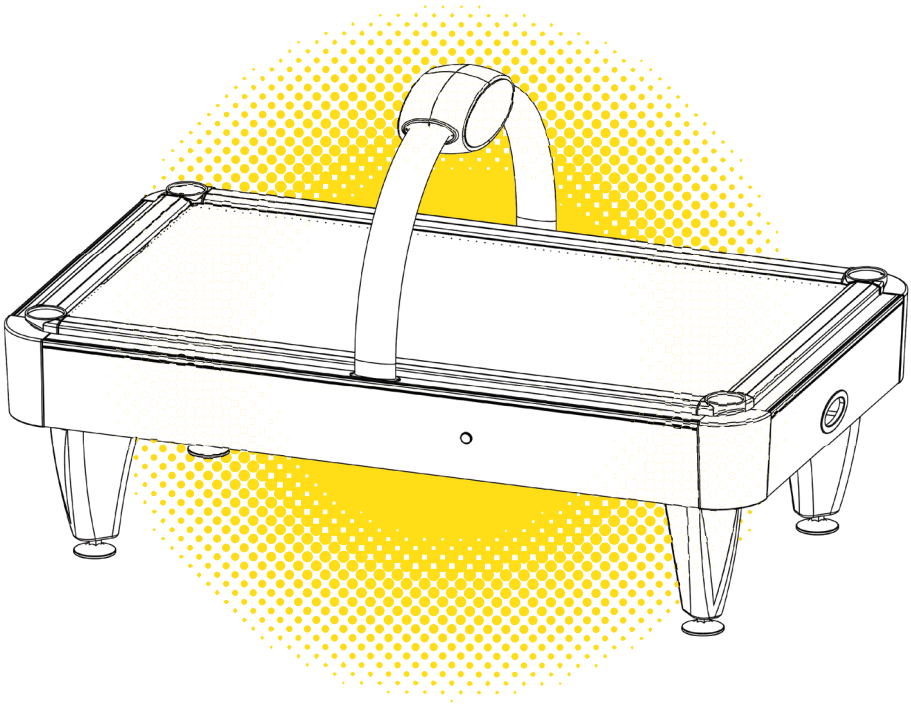

IMPORTANT! Before using this product, read this owner's manual carefully to understand the contents herein stated.

BEFORE USING THE PRODUCT , BE SURE TO READ THE FOLLOWING NOTE:

To ensure the safe usage of the product, be sure to read the following note before using the product. The following instructions are intended for the users, operators and the personnel in charge of the operation of the product. After carefully reading and sufficiently understanding the warning icons, handle the product appropriately. Be sure to keep this manual nearby the product or elsewhere convenient for referring to it when necessary.

Herein, instructions which require special attention are marked with dual lines. Depending on the potentially hazardous degrees, the icons of **DANGER!, WARNING!, CAUTION!**, etc. are used. Be sure to understand the significance of the icons before reading the content.



Indicate that ignoring this icon and improper operation will result in serious injury or even life safety.



Indicate that ignoring this icon and improper operation will result in serious injury.



Indicate that ignoring this icon and improper operation will result in minor injury or product damage.



Indicate that ignoring this icon and improper operation will result in the product not functioning properly and malfunctioning.

■ Following the instructions herein stated when operating product.

Instructions herein would mention paying attention to the aspect of accident prevention. If you don't operate product by following instructions may cause accidents. In the case only those who have technical expertise could operate the product to avoid hazardous situation.

■ Be sure to turn off the power before operating the machine.

To prevent electric shock, be sure to turn off the power before operating the product. If the work should be performed in the power-on status, be sure to following the instruction herein to operate the product.

■ Be sure to use fuses which meet the specified rating. (only for the machines which use fuses)

Using fuses exceeding the specified rating can cause short circuited and electric shock.

■ Remove, change or add the part which is not designated by YANG GONG are not allowed.

It is very hazardous to operate the product by removing parts and or modifying the circuits. If door, lid or protective part is damaged or lost, power off the product and contact where the product was purchased from or the office herein stated.

■ Ensure that the product meets the requirements of appropriate Electrical Specifications.

Before installing the product, check for Electrical Specifications. Using any Electrical Specifications different from the designated Specifications can cause short circuited and electric shock.

■ Ensure that the Power Supply used is equipped with an Earth Leakage Breaker.

This product does not incorporate the Earth Leakage Breaker. Using a power supply which is not equipped with the Earth Leakage Breaker can cause short circuited when earth leakage occurs.

■ **Install and operate the product in places where appropriate lighting is available, allowing warning labels to be clearly read.**

To ensure safety for the customers, stickers describing potentially hazardous situation are applied to places where accidents may be caused. Ensure that where the product is operated has sufficient lighting allowing the warnings to be read. If any sticker is peeled off, apply it again immediately.

INSPECTIONS IMMEDIATELY AFTER TRANSPORTING THE PRODUCT TO THE LOCATION

Normally, at the time of shipment, YANG GONG products are in a status allowing for usage immediately after transporting to the location. Nevertheless, an irregular situation may occur during transportation. Before turning on the power, check the following points to ensure that the product has been transported in a fine status.

■ Are there any dented portions or defects (cuts, etc.) on the external surfaces of the cabinet?

■ Do the power supply voltage and frequency requirements meet with those of the location?

■ Are all wiring connectors correctly and securely connected? Unless connected in the correct direction, connector can not be connected accurately. Do not insert connectors forcibly.

■ Do power cords have cuts and dents?

■ Are all accessories available?

CONTENTS

01. Precautions of installation - 1

02. Precautions of installation location - - - - - - - - - - - - - - - - 2

03. Precautions of gaming - 3 ~ 4

04. Name of parts - 5

05. Assembling & installation - 6 ~ 10

06. Finish - 11

07. Periodic maintenance inspection list - - - - - - - - - - - - - - - - 12 ~ 13

08. Trobleshooting - 14

01. PRECAUTIONS OF INSTALLATION

When installing or inspecting the machine, be very careful of the following points and pay attention to ensure that the player can enjoy the game safely.

Non-compliance with the followg points or inappropriate handling to the cautionary matters herein stated can cause personal injury or damage to the machine.



- Before overhaul the product, be sure to turn off the power. Overhaul the product without turning the power off can cause an electric shock or short circuit.
- To avoid electric shock or short circuit, do not insert or pull out the plug quickly.
- To avoid electric shock, do not unplug with a wet hand.
- Do not expose power cords and earth wires on the surface (floor,passage, etc.). If exposed, the power cords and earth wires are susceptible to damage. Damaged cords and wires can cause electric shock or short circuit.
- To avoid causing short circuited or electric shock, do not put things on or damage power cords.
- After installing the product, do not unnecessarily pull the power cord. If damaged, the power cord can cause short circuited or electric shock.
- In case the power cord is damaged, ask for replacement through where the product was purchased from or the office herein stated. Using the cord as is damaged can cause short circuited, electric shock or leakage.
- Be sure to perform grounding appropriately. Inappropriate grounding can cause an electric shock.
- Be sure to use fuses meeting specified rating. Using fuses exceeding the specified rating can cause short circuited or electric shock.
- To avoid causing short circuited or electric shock, do not remove, change or add the part which is not designated by YANG GONG.
- Be sure to perform periodic maintenance inspections herein stated (Chapter 11).



When you clean the surface of the playfield, use soft and dry cloth. Don't use any chemicals like paint thinner or benzine.

02. PRECAUTIONS OF INSTALLATION LOCATION

This product is an indoor game machine. Do not install it outdoor. Even indoors, avoid installing in places mentioned below so as not to cause short circuited, electric shock, injury and or malfunctioning.



- High humidity area such as indoor pool or shower room.
- Place exposed to direct sunlight or high temperature.
- Place filled with inflammable gas, highly inflammable / volatile chemicals or hazardous matter.
- Dusty places.
- Sloped surfaces.
- Place that is susceptible to any type of external force
- Near fire facilities, such as fire exits and fire extinguishers
- The operating (ambient) temperature range is from 10°C to 35°C.

LIMITATIONS OF USAGE REQUIREMENTS



- Be sure to check the electrical specifications. Ensure that this product is compatible with the location's power supply, voltage and frequency requirements. A plate describing electrical specifications is attached to the product. Non-compliance with the electric specifications can cause short circuited or electric shock.
- This product requires the breaker and earth mechanisms as part of the location facilities. Using them in a manner not independent can cause short circuited and electric shock.
- Ensure that the indoor wiring for the power supply is rated at 7A or higher (AC single phase 100~120V area), and 5A or higher (AC 220~240V area). Non-compliance with the electrical specifications can cause short circuited and electric shock.
- Be sure to independently use the power supply equipped with the earth leakage breaker. Using a power supply without the earth leakage breaker can cause short circuited when earth leakage occurs.
- Putting many loads on one electrical outlet can cause generation of heat and a fire resulting from overload.
- When using an extension cord, ensure that the cord is rated at 15A or higher (AC 100~120V area) and 15A or higher (AC 220~240V area). Using a cord rated lower than the specified rating can cause short circuited and electric shock.

03. PRECAUTIONS OF GAMING

For the safe operation of the product, be sure to comply with the following precautions.

BEFORE STARTING OPERATION

WARNING!

In order to avoid accidents, check the following matters before starting the operation:

- Check if all the adjusters are in contact with the surface. If the adjusters are not in contact with the surface, the cabinet can move and cause an accident.
- Check whether the game machine is level or not.

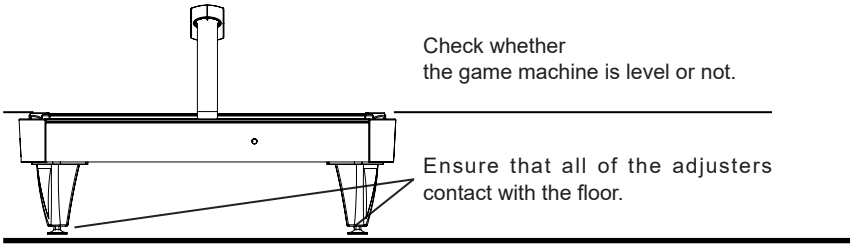

- Do not put any heavy item on this product. Placing any heavy item on the product can cause falling down accidents or parts damage.
  Do not climb on the product. Climbing on the product can cause falling down accident. If you intend to to check the top of the product, please use a ladder.
- To avoid electric shock, please check if door or cover parts are damaged or missing.
- To avoid electric shock, short circuit or parts damage, do not put the following items near by the product.
  [Flower vases, flower pots, cups, water tanks, cosmetics and receptacles/containers/ vessels containing chemicals or water.]

CAUTION!

To avoid injury, be sure to provide sufficient space by considering the potentially crowded situation at the installation location. Insufficient installation space can cause the player to come into contact with or hit the others and result in injury or trouble.

IMPORTANT!

Mallets and pucks could be taken away. Keep mallets and pucks in an appropriate place as much as possible so that the staff can watch them from been take away.

PAYING ATTENTION TO PLAYERS

To avoid injury and trouble, be sure to constantly pay attention to the behavior and manner of the pedestrians and players.

WARNING!

- To avoid electric shock and short circuit, do not allow players to put hands and fingers or extraneous matter in the gaps of the product or small gaps around the doors.
- To avoid falling down and be injured, immediately stop the players from leaning against or climbing on the product.
- To avoid electric shock and short circuit, do not allow the players to unplug the power plug without a proper reason.
- To avoid injury from falling down, and electric shock due to spilled drinks, instruct the player not to place heavy items or drinks on the product.

CAUTION!

- Immediately stop such violent acts as hitting and kicking the product. Such violent acts can cause parts damage or falling down resulting in injury.
- Instruct those who wear high-heeled shoes from not to playing the game by explaining that playing game with high-heeled shoes would cause potentially hazardous situation.



- To avoid injury, do not allow the players to put their hands on the playfield.
- Ensure that the player holds the handle of the mallet. Playing by holding the outer part of mallet (which would directly contact with the puck when hitting) can cause injury.

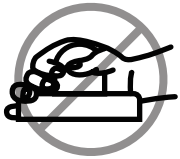

IMPORTANT!

Instruct the player not to put beverages on the playfield. Spilled drinks can infiltrate into the wooden board of the machine and cause the wooden board to be deformed, resulting in unsatisfactory playing.

04. NAME OF PARTS

ISOMETRIC VIEW

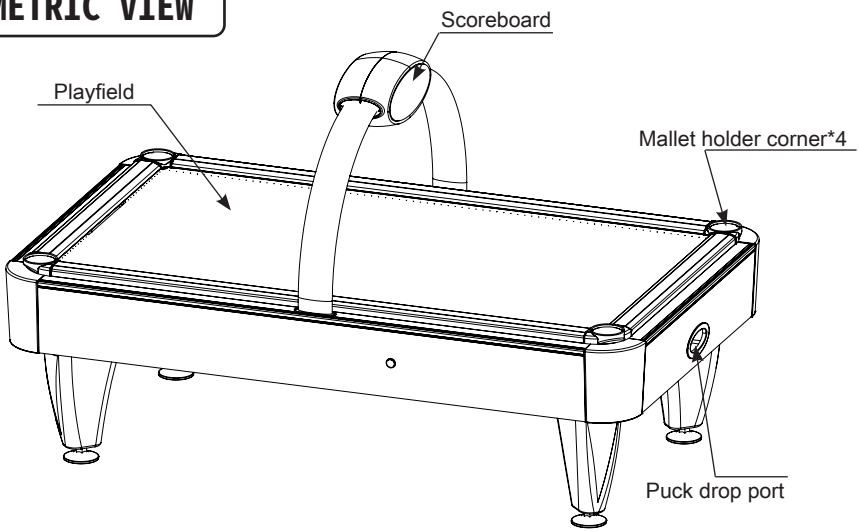

BACK VIEW

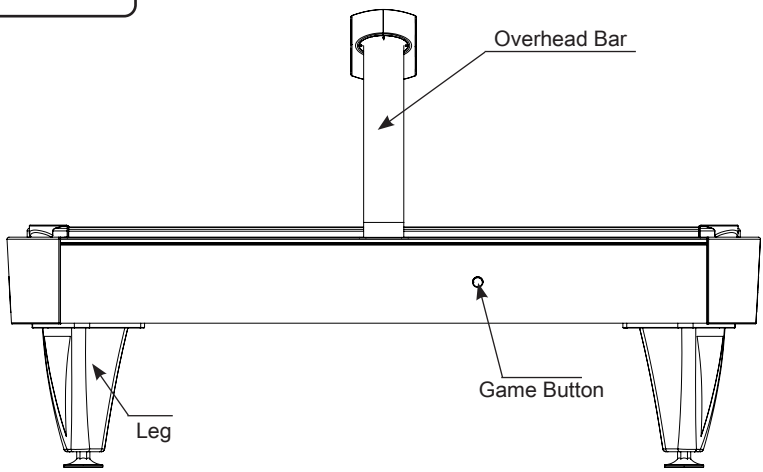

	Width		Length		Height	(mm)
Cabinet	1365	X	2285	X	732	
When assembled	1365	X	2285	X	1390	

05. ASSEMBLING & INSTALLATION

WARNING!

- Please follow the steps described here to assemble the product. Failing to comply with the instructions, for example, inserting the plug into an outlet at the stage not mentioned in this manual can cause an electric shock accident.
- Please follow this manual to assembly. Since this is a complex machine, erroneous assembling can cause damage to the machine or malfunction to occur.
- When assembling, please be sure to work by multiple people. Depending on the assembly work, in some cases, performing work by one person may result in personal injury or component damage.

When performing the assembly, please follow the 8 steps below to follow the sequence :

1. **UNBOX & TAKE OUT THE PARTS FROM THE CABINET**
2. **INSTALL THE LEGS OF THE CABINET**
3. **REVERSE THE CABINET & REMOVE THE BOX**
4. **INSTALL THE BILLBOARD TOWER**
5. **STEADY THE MACHINE (ADJUSTER ADJUSTMENT)**
6. **PLACE THE PUCKS AND MALLETS**
7. **INSERT THE PLUG**
8. **INITIALIZING**

When assembling, the key (an accessory) and level are needed in addition to such tools as a Philips screwdriver, wrench.

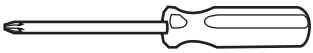

Philips screwdriver

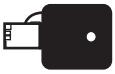

Key



Wrench

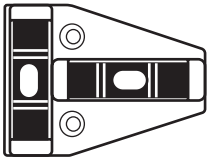

Level

1 UNBOX & TAKE OUT THE PARTS FROM THE CABINET

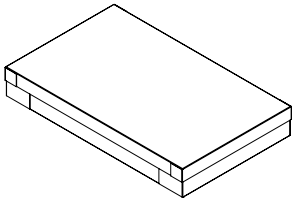

① Box

2310*1400*310 (mm)

Weight : 109kg

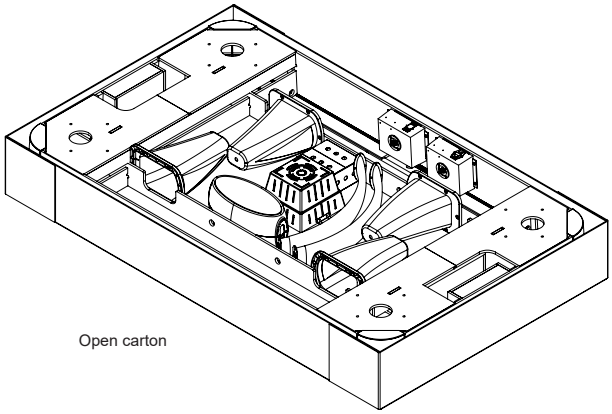

Open carton

Open carton and take all parts out .

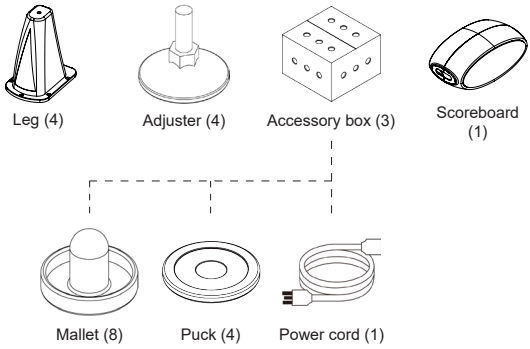

2 INSTALL THE LEGS OF THE CABINET & MOUNTING BRACKET

① Installing the adjusters to 4 legs.

② Using 16 pan head screws (M8*30) ,16 M8 spring washers and M8*Ø16 washer to install the legs.

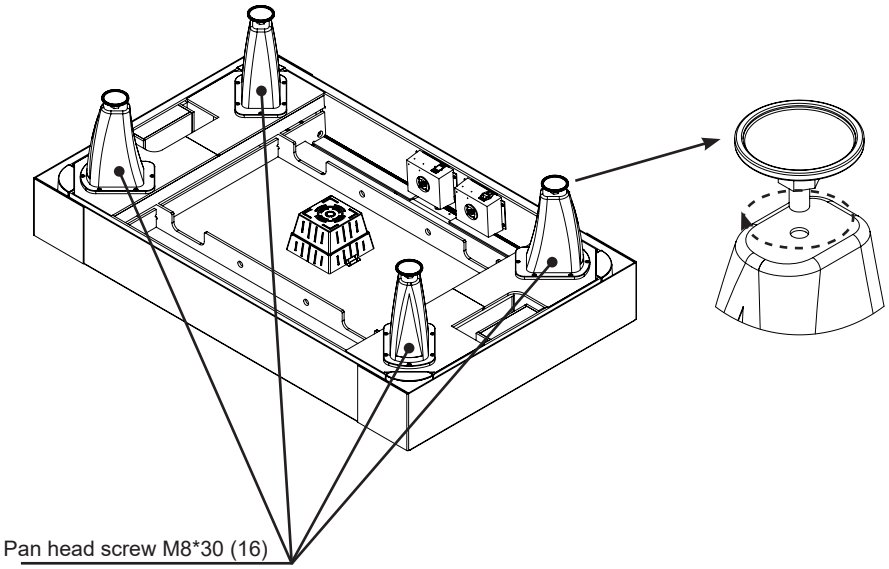

Pan head screw M8*30 (16)
M8*Ø16 washer (16)

3 REVERSE THE CABINET & REMOVE THE BOX

< 4~6 PEOPLE ARE NEEDED WHEN TURNING THE MACHINE >

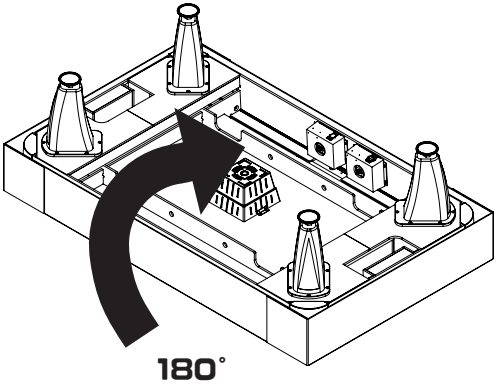

4 INSTALL THE BILLBOARD TOWER

① Attach the two bent pipes to the score counters, ensuring that the bent pipe with the socket end connects to the side of the score counter with the socket. First, connect the socket, then secure it with screws . Pic.01

② Install the fully assembled score counter with the bent pipes onto the machine. Ensure that the side with the socket connects to the corresponding side of the machine with the socket . Pic.02

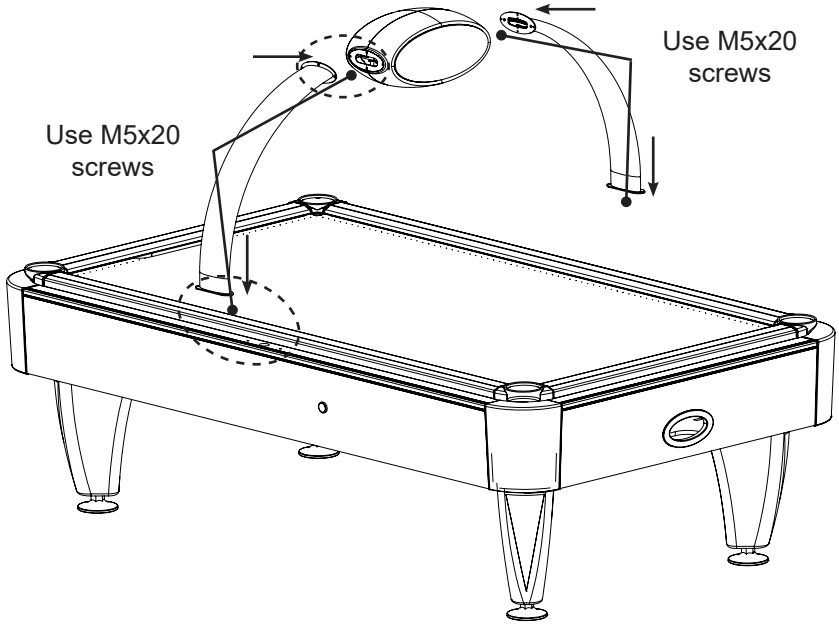

The terminals on both sides should be connected first .

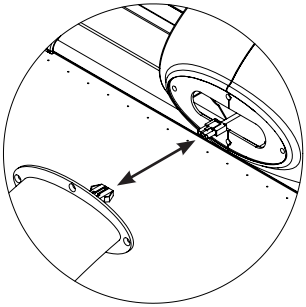

Pic.01

The terminals on both sides should be connected first .

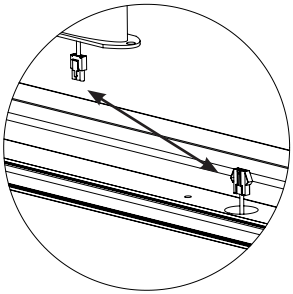

Pic.02

5 STEADY THE MACHINE (ADJUSTER ADJUSTMENT)

WARNING!

Make sure that all of the adjusters are in contact with the floor. If they are not, the cabinet may move and cause an accident.

This machine has 4 adjusters. When the Installation position is decided, make sure that the adjusters are in contact with the floor directly and the position of the machine is level.

① Bring the product to the location and level the machine by turning the adjusters.【 Pic.01 】

② Apply a level on the playfield to check horizontality.

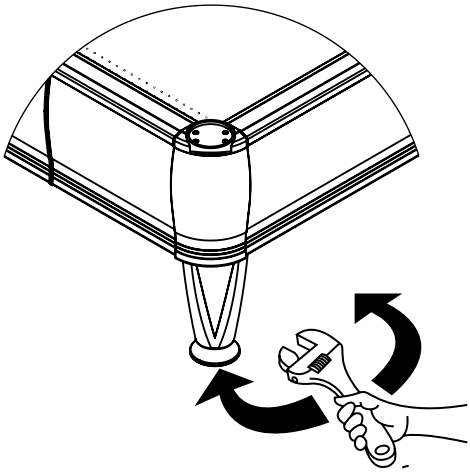

6 PLACE THE PUCKS AND MALLETS

IMPORTANT!

Do not put more than 2 pucks in the product. Ensure that the minimum and maximum numbers of pucks in the product are between 1.pcs . .

① Put 1 puck for each of the home side .

② Put 4 mallets in place at the 4 mallet holder comers.

※ **It is strictly forbidden to use a puck which is not for this product.**

06. Finish

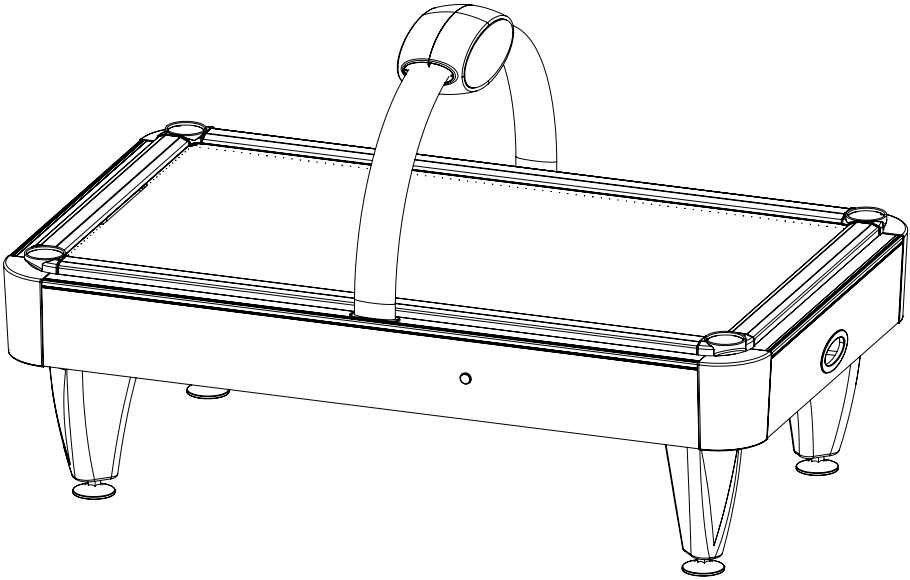

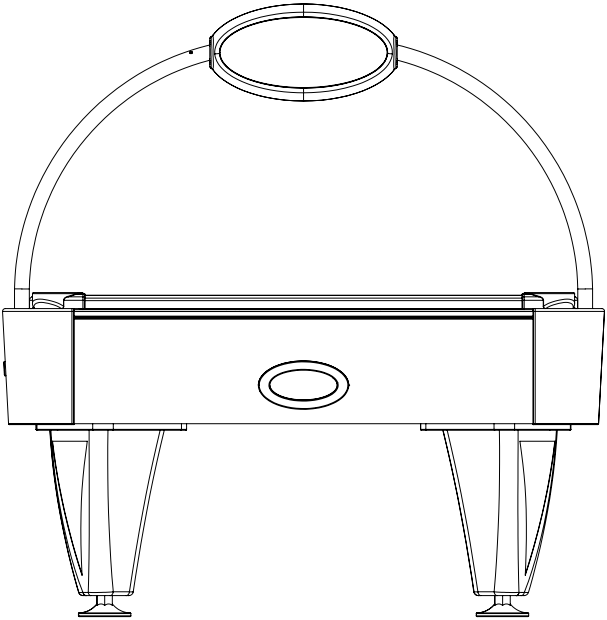

07. PERIODIC MAINTENANCE INSPECTION LIST

In order to maintain the performance of this product and ensure the safe operation, be sure to check and perform the following maintenance list regularly.

WARNING!

- Be sure to check every month to see if power cords are damaged, the plug is securely inserted, dust is accumulated between the socket outlet and the power plug, etc.. Using the product with dust as is accumulated can cause short circuited or electric shock.
- Be sure to do the interior cleaning every month. Using the product with dust as is accumulated in the interior without cleaning can cause short circuited or accident.

IMPORTANT!

Taking food and drink on the playfield is strictly prohibited. If beverage is spilled, please wipe it off immediately. Leaving spilled juice, etc. without wiping off would make the beverage come inside through the air outlet holes and infiltrating into the woodwork. This may cause the playfield to be warped and result in an unsatisfactory playing. Instruct the players not to put food and drinks on the playfield.

	Item	Interval	Reference
Playfield	Surface cleaning & waxing	Weekly	Page 13
	Horizontal adjustment	Monthly	
	Check air outlet holes	Monthly	
Interior	Clean & check	Monthly	See above
Power supply plug	Clean & check	Monthly	

CLEAN THE PLAYFIELD

- Once every week, be sure to wipe off playfield surface with alcohol or a neutral glass cleaner.
- Do not use silicon, wax or anything that might block air outlet.
- If the air outlet is blocked, cleaning it with a thin item like a safety pin.
- When checking the air outlet, slide the puck over the playfield with the blower operating. If the puck slides smoothly, it is satisfactory. If the puck is stopped on the playfield, using the safety pin, etc. through the air outlet several times and then slide the puck again to ensure the puck is not caught on the playfield.
- **After cleaning the playfield, wax it to keep the surface smooth for the regular gameplay. < IMPORTANT >**

CLEAN THE MALLETS AND PUCKS

When badly soiled, the puck will not slide smoothly and the game can not be played satisfactorily. Cleaning by wiping off with alcohol or neutral detergents. If soils can not be removed, replace the puck.

TROUBLESHOOTING

Sometimes a problem occurring when the machine is operating can not be displayed on the scoreboard. When this happens, please refer to the table below to assist with troubleshooting.

Trouble	Cause	Countermeasure
When the main switch is turned on, the machine is not activated.	The power is not on. Incorrect power source/ voltage. AC unit circuit protector functioned due to instantaneous overcurrent.	Firmly insert the plug into the outlet. Make sure that the power supply & voltage are correct. Check circuit protector. Remove the cause of overload to reinstate the circuit protector.
The lamp lights up but nothing is displayed on the scoreboard.	Scoreboard is damaged.	Replace scoreboard.
No sound.	The volume of switch unit is minimum.	Set adequate sound volume.
The puck enters the goal but didn't get a score.	The scoring sensor is damaged. Foreign matter exists in the Goal.	Replace sensor. Remove the foreign matter.
No air blowing out.	Blower is damaged.	Replace blower.

YUAN GONG CO.,LTD

Have fun !

CLASSIC HOCKEY /
RESIDENTIAL AIR HOCKEY





CONTACT

Address

Yuan Gong Technology Co., Ltd.
No. 45, Alley 1, Lane 46, Zhongzheng Road
Niaosong District, 833 Kaohsiung City
Taiwan

Phone & Fax

Phone: +886 7732 4520

Fax: +886 7732 8875

Online

Email: info@yg-web.com.tw

Website: http://www.yg-web.com.tw