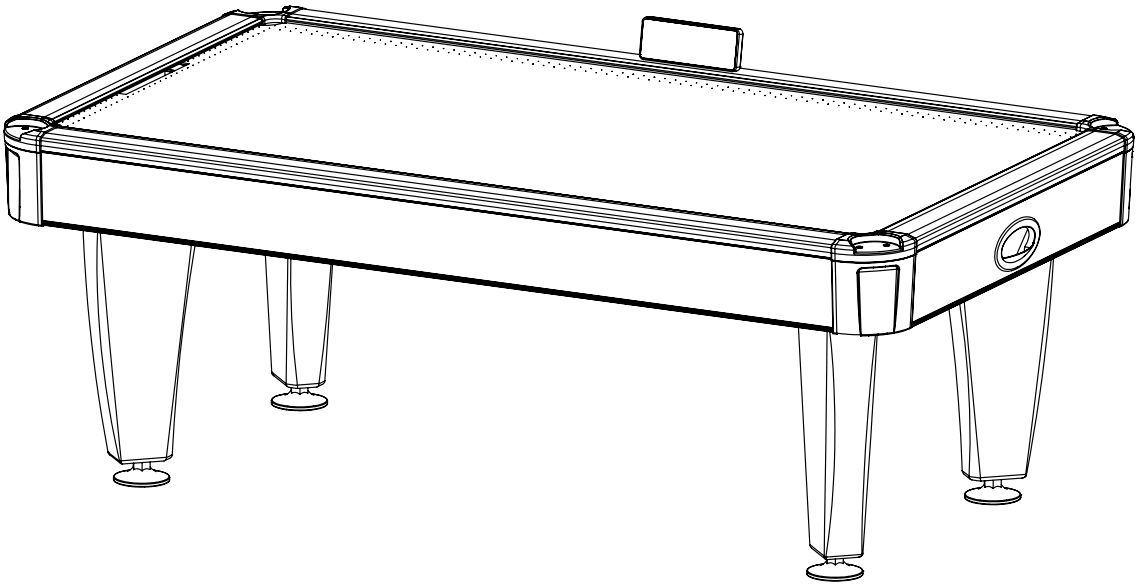

MODEL.

SH-L045 ' L046

Owner's Manual

ASSEMBLY OPERATION &
CARE INSTRUCTIONS

Input : 100-230V 50/60Hz
1.5A MAX

Introduction

1. Please read this manual carefully before assembly or use .
2. Before assembly, please ensure there is enough space for placement and movement .
3. Assembly requires at least 4 people. Please pay attention to safety during transportation .
4. Before assembly, please make sure all parts and components of the machine are complete .

TOOL

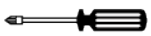
Screw driver

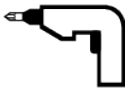
Electric screw driver

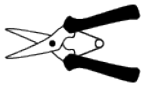
Scissors

STEP 1

A Open the cardboard box and EPE(Expanded Polyethylene)and to ensure the wooden side is facing upwards.

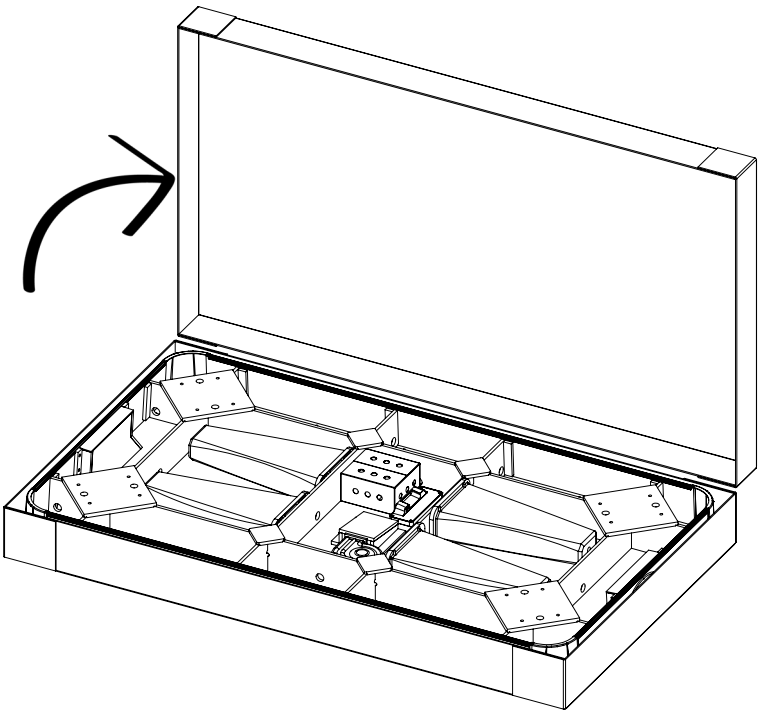

STEP 2

Take all parts out.

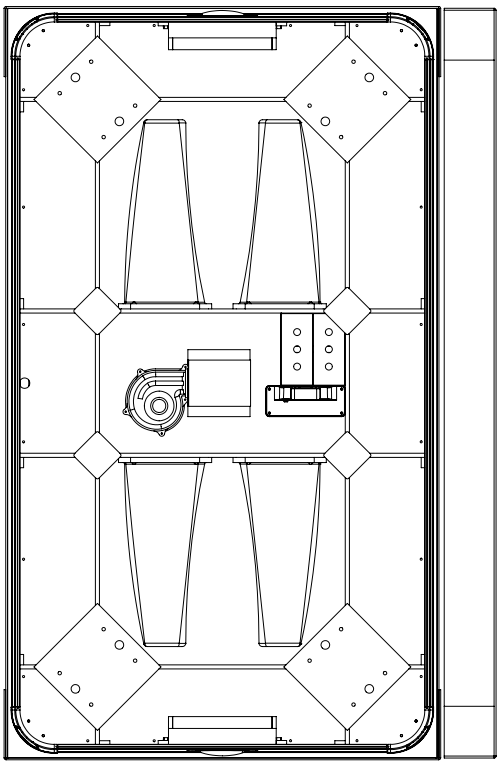

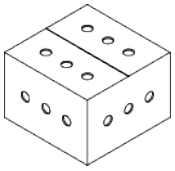

Accessory Box (1)



Leg (4)

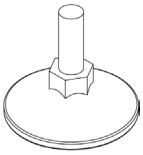

Adjuster (4)

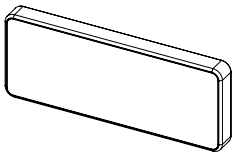

Socreboard (1)

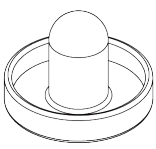

Mallet (4)

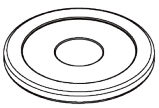

Puck (4)

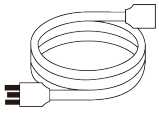

AC power Cord(1)

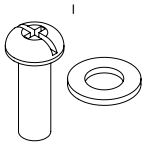

Bolt M8x25(16) Washer M8(16)

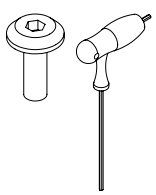

Bolt M4x12(2) Hex Key (1)



Warning label(1)

STEP 3

A Turn the adjuster clockwise to lock the leg .

B Install the legs with bolt M8x25(16) and washer M8(16) as shown in the picture below.

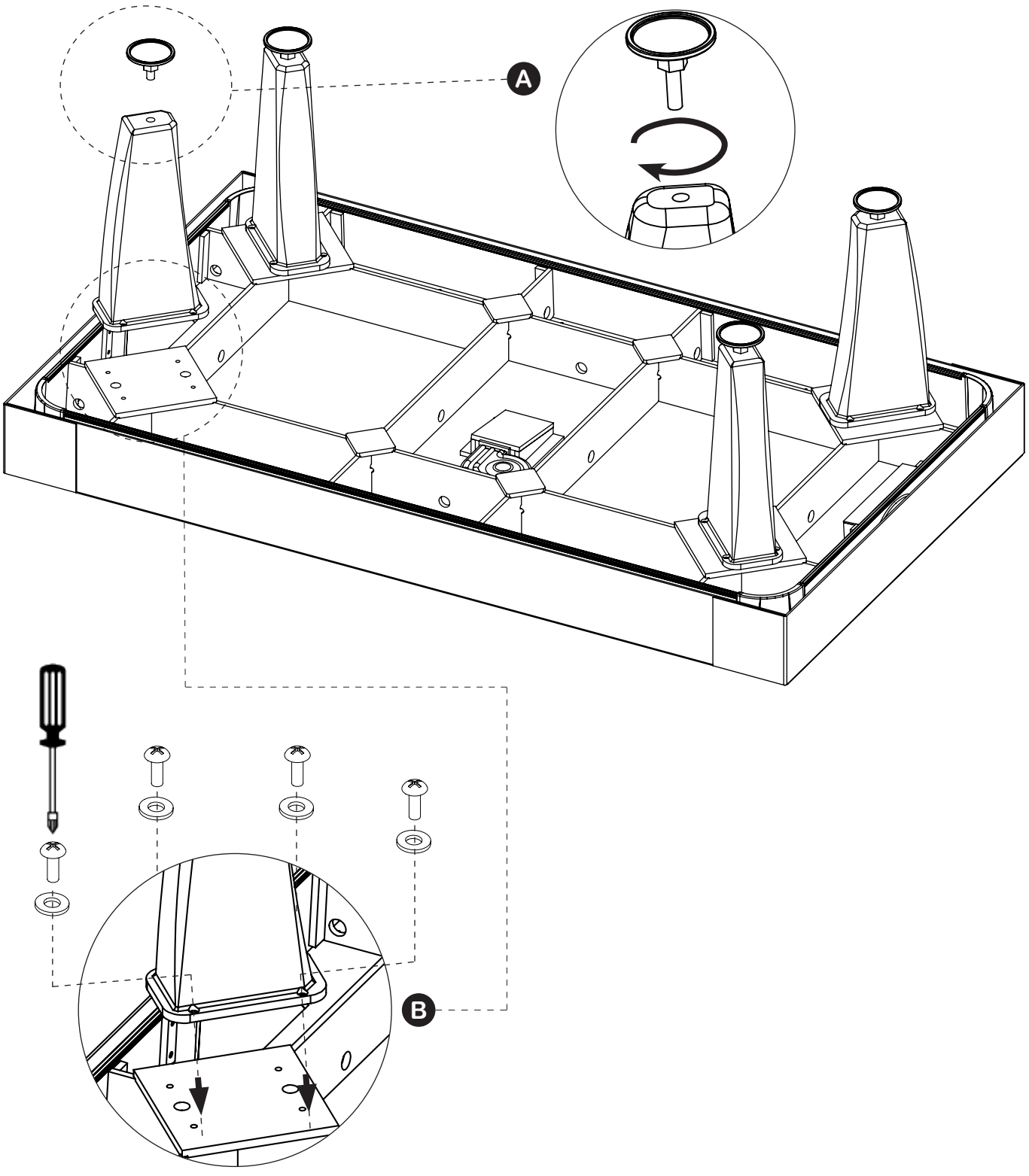

STEP 4

4 strong adults are required to turn the table over.

Once the legs are tightly screwed onto the table base , flip and position the table by 90 degree angle ; then flip it again in the same manner to conclude with the upright position.

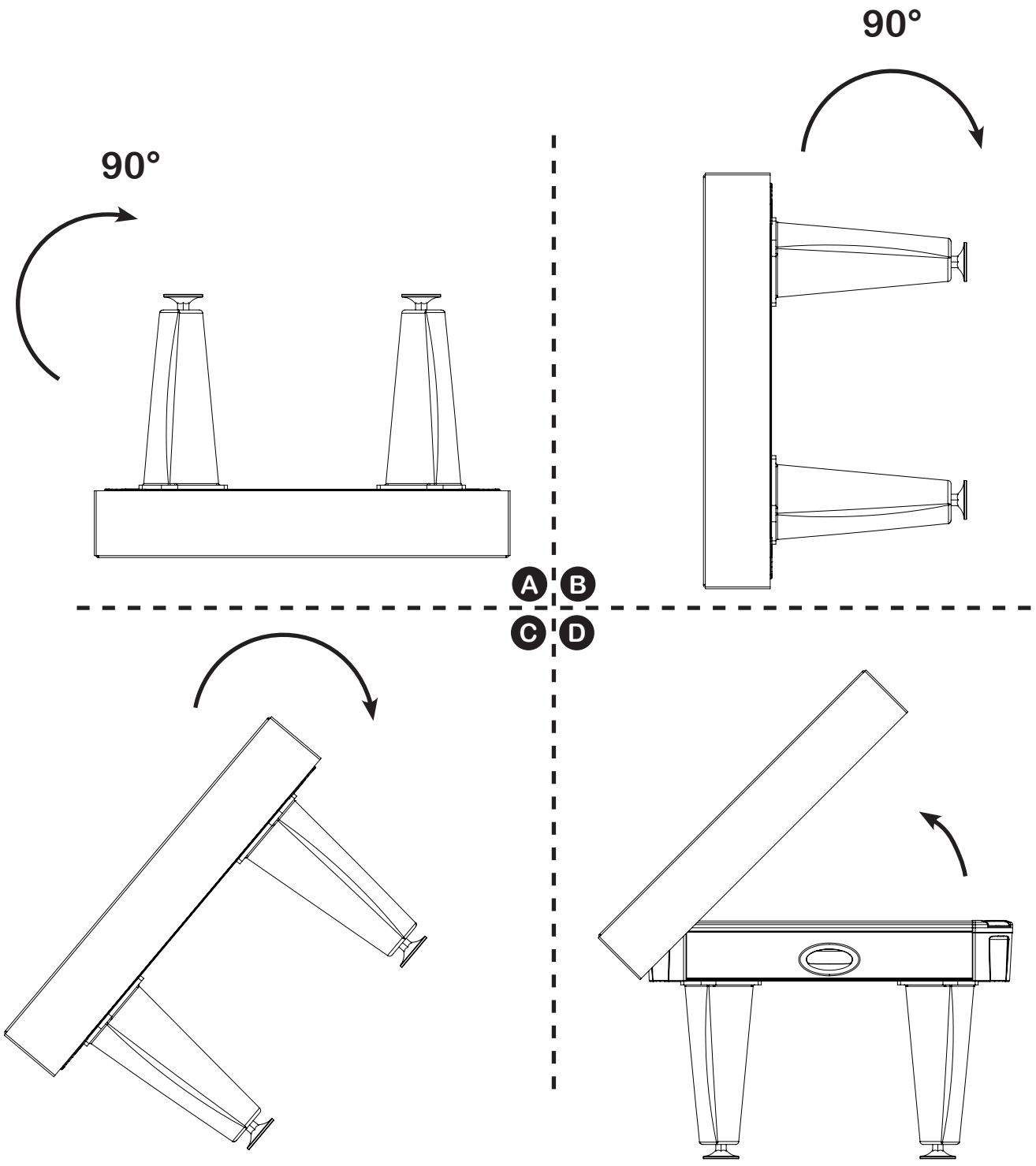

STEP 5

A After completion, rotate the screw base to adjust the machine height.

B After adjusting the leg base, connect the scoreboard plug to the machine. Make sure the plug is securely connected .

C After connecting the wires, use a hex key wrench to tighten the two hex screws (M4x12) from the back of the scoreboard.

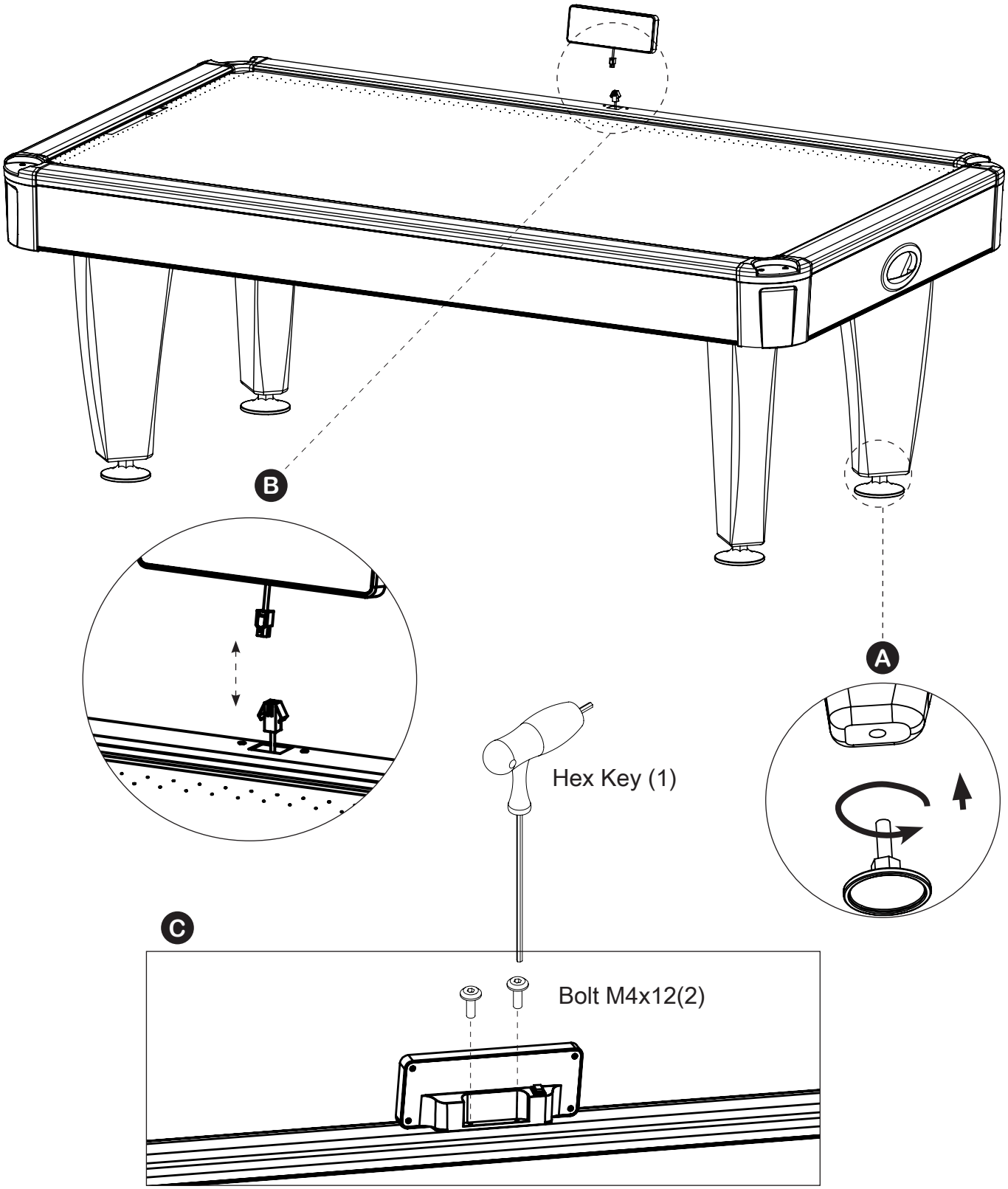

Game Settings & Feature Introduction

Bottom view

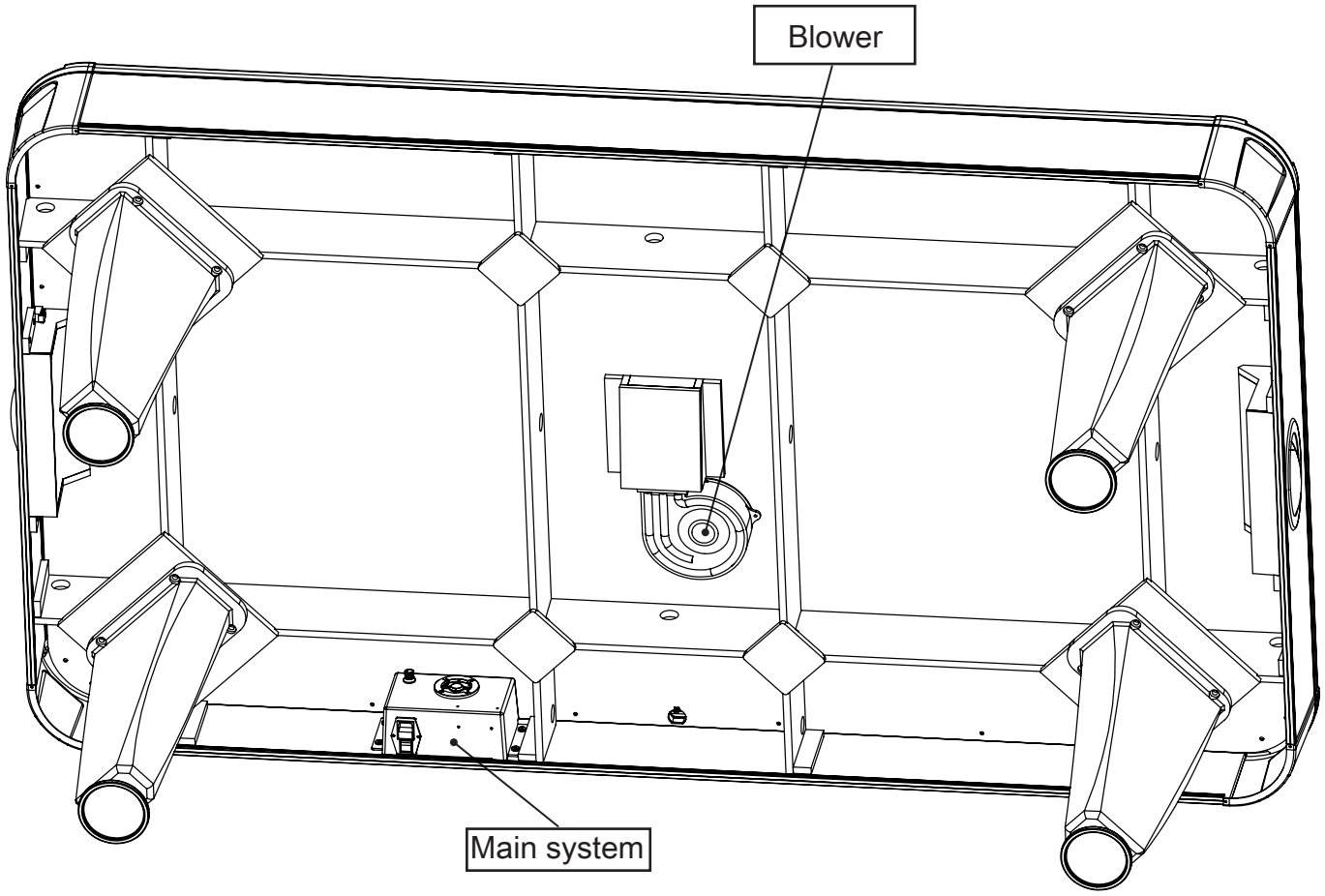

Main system

The main system has a "volume control knob" to adjust the volume. The power switch is located where the power cord is plugged in and is used to turn the system on or off。

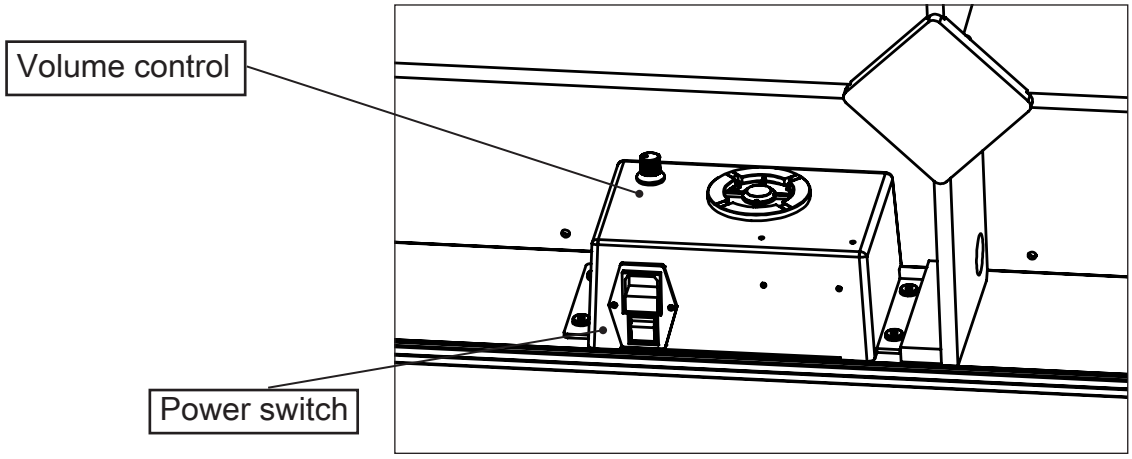

Scoreboard settings

Below are the explanations of the scoreboard fields and how to start the game by setting the game time to configure the machine。

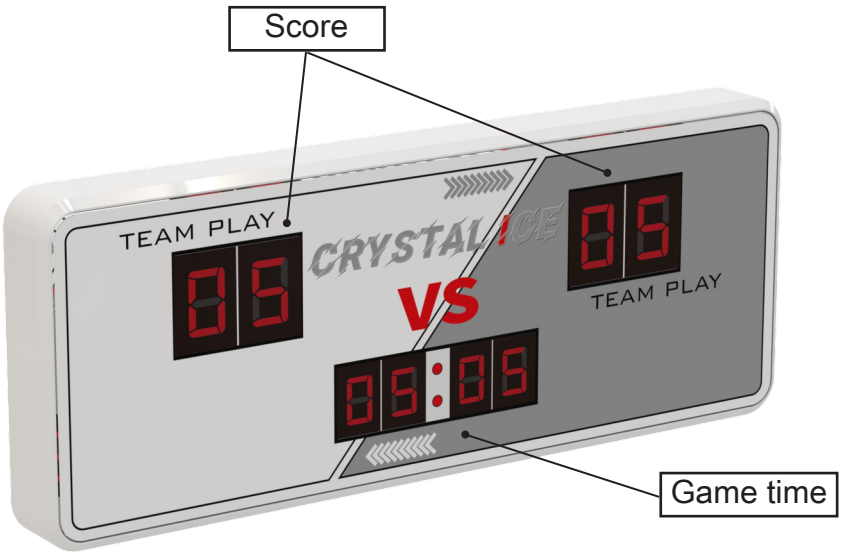

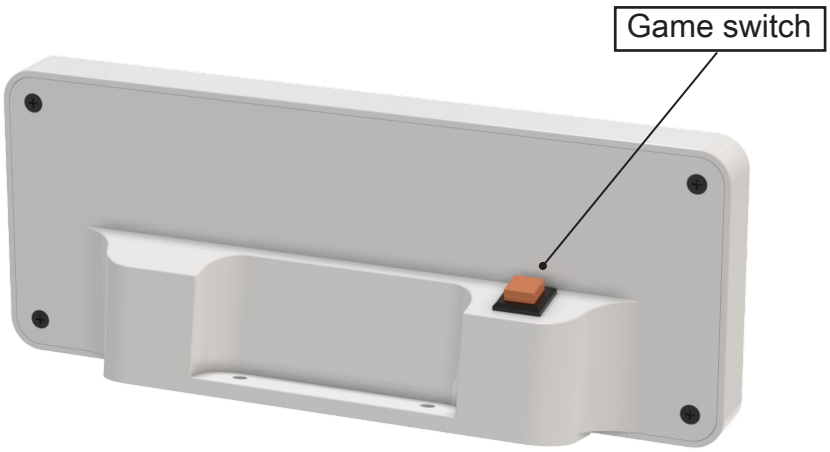

Game settings

After turning on the machine power, the scoreboard display will light up, indicating the machine is in standby mode. To start the game, press the "Game Switch" button located at the back of the scoreboard. Pressing it once will start the game (desktop fan activated) and display a 3-minute game timer. Pressing it again will add 3 more minutes, making it 6 minutes, and so on (each press adds 3 minutes). To end the game, wait for the game timer to run out or turn off the power switch directly。

Notices during Use and accessory disassembling

1. Watch for the power plug load during use to avoid short or fire.Do not overloading.

2. The power supply wire should be securely fixed to prevent stepping on or tripping.

3. This product is an electronic game;keep children off from powersource plug. During the operation of this electronic product , adults shall give warning and monitoring to reduce risk.

4. Keep table surface always clean and avoid dust covered.

5. Do not use any sharp object to scrape the table surface to avoid the scratch.

6. Please change a new puck when it does not move fluently during the game.

7. Please check the holes if the puck goes slowly or stop in a certain place when playing.

8. when problems occur as below , do not try solve or repair on your own. Contact electricians for repair.
   - Operational failure of fan motor damage .
   - Problems of power source wire or plug ;
   - Liquid on the surface or foreign object is found in the motor.
   - Abnormal sound is detected during the operation of the fan motor.

9. When machine goes error or abnormality , operation must be stopped , inspection technician is advised.

10. Adjust the adjustable bolt if necessary to keep table in horizontal position.

11. Be sure to avoid shaking when transport / loading.

12. Avoid wetness when placed out door.

Care and Maintenance

1. Please use a soft dry cloth and pollshing spary to clean the table surface . DO NOT APPLY WATER .

2. Wax the table surface periodically to ensure smooth air hockey play.

3. Clean out the objects stuck in ventilation holes with a pin.

4. Open the puck released door to clean the track of balls to prevent them from becoming stuck.

5. Dirt on the pcboard shall be cleaned with a soft brush . Do not use water or a wet cloth to clean it .

6. The score board shall be cleaned with a cloth and keep dust free.

7. Clean body and rails with soft , dry and waxed cloth.

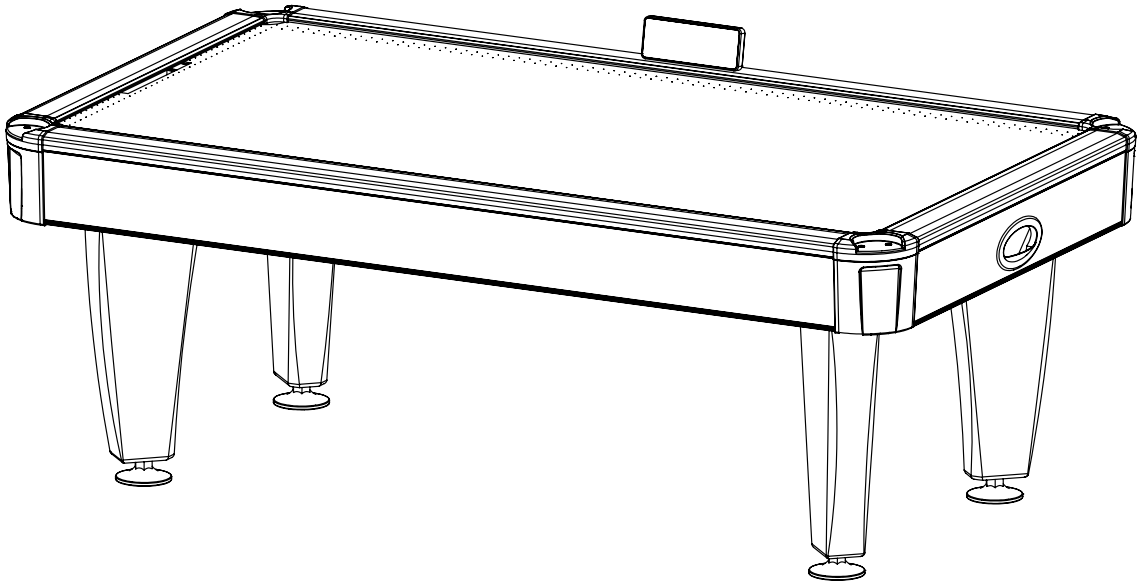

型號 .

SH-L045

用戶手冊

裝配操作 &
保養說明

電壓 :
Input : 100-230V 50/60Hz
1.5A MAX

組裝前注意事項

1. 組裝或使用之前請仔細閱讀本操作手冊 .
2. 組裝前 , 請注意空間是否足夠擺放或移動 .
3. 組裝人員需 4 人以上 , 注意搬運時的安全 .
4. 組裝前 , 請確認機台的零配件是否齊全 .

組裝所需工具

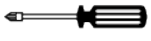
十字起子

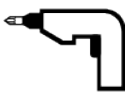
電動十字起子

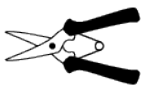
剪刀

STEP 1

Ⓐ 將紙箱上蓋開啟 , 此時機台為底面朝上

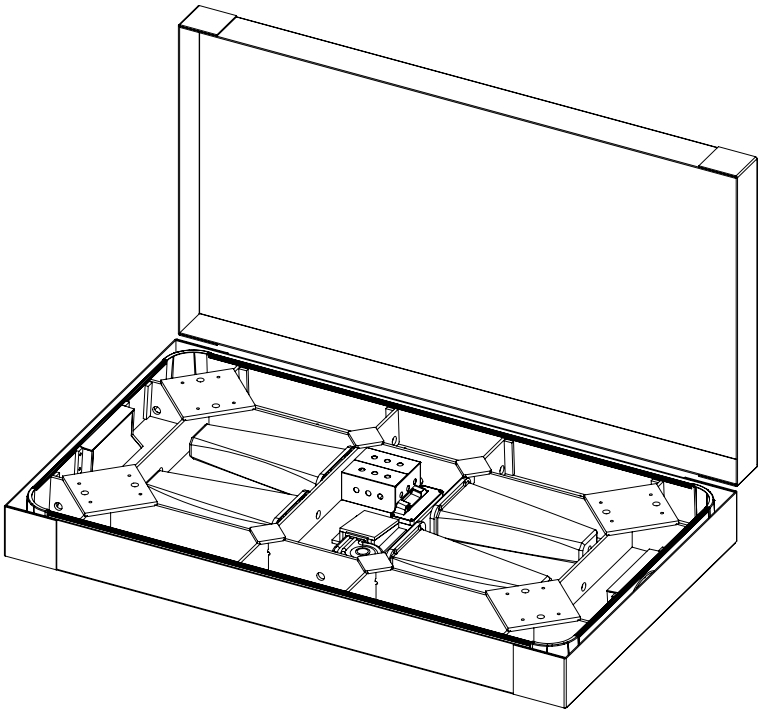

STEP 2

取出箱內零配件

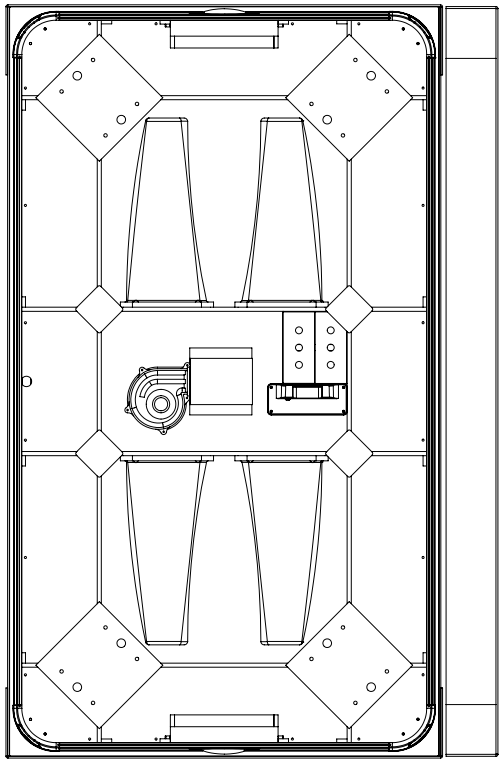

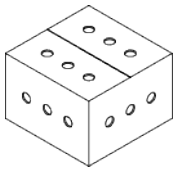

配件盒 (1)

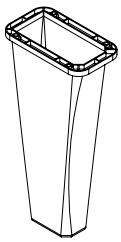

腳座 (4)

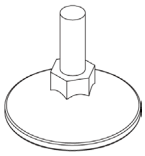

調整螺絲座 (4)

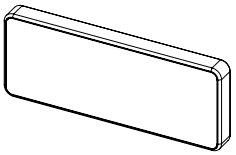

計分器 (1)

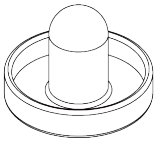

球把 (4)

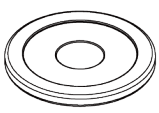

球盤 (4)

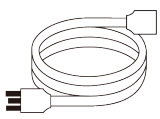

電源線 (1)

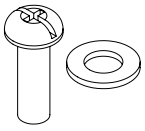

丸頭螺絲
M8x25(16)
平滑絲
M8(16)

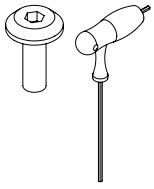

六角螺絲
M4x12(2)
六角板手 (1)



警語貼紙 (1)

STEP 3

Ⓐ 將調整螺絲座 , 以順時針方式鎖上腳座

Ⓑ 使用 M8x25 螺絲 & M8 華司 , 將腳座鎖上機台底板 .

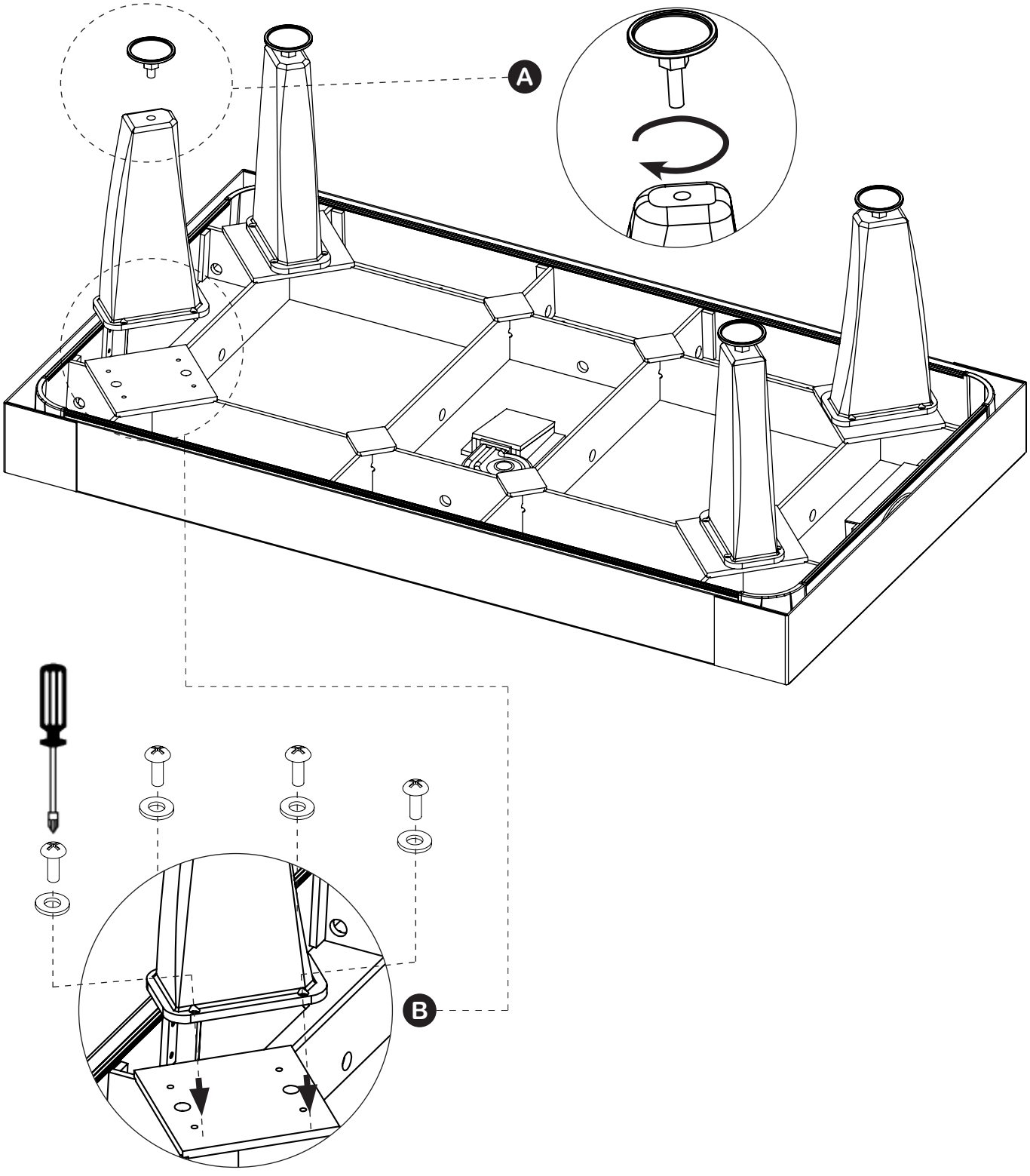

STEP 4

此動作務必需要 4 名成人完成

當腳座固定後 , 首先翻轉機台成 90 度 , 再以相同方式翻正
機台翻正放置時 ,4 腳座需同時接觸地面

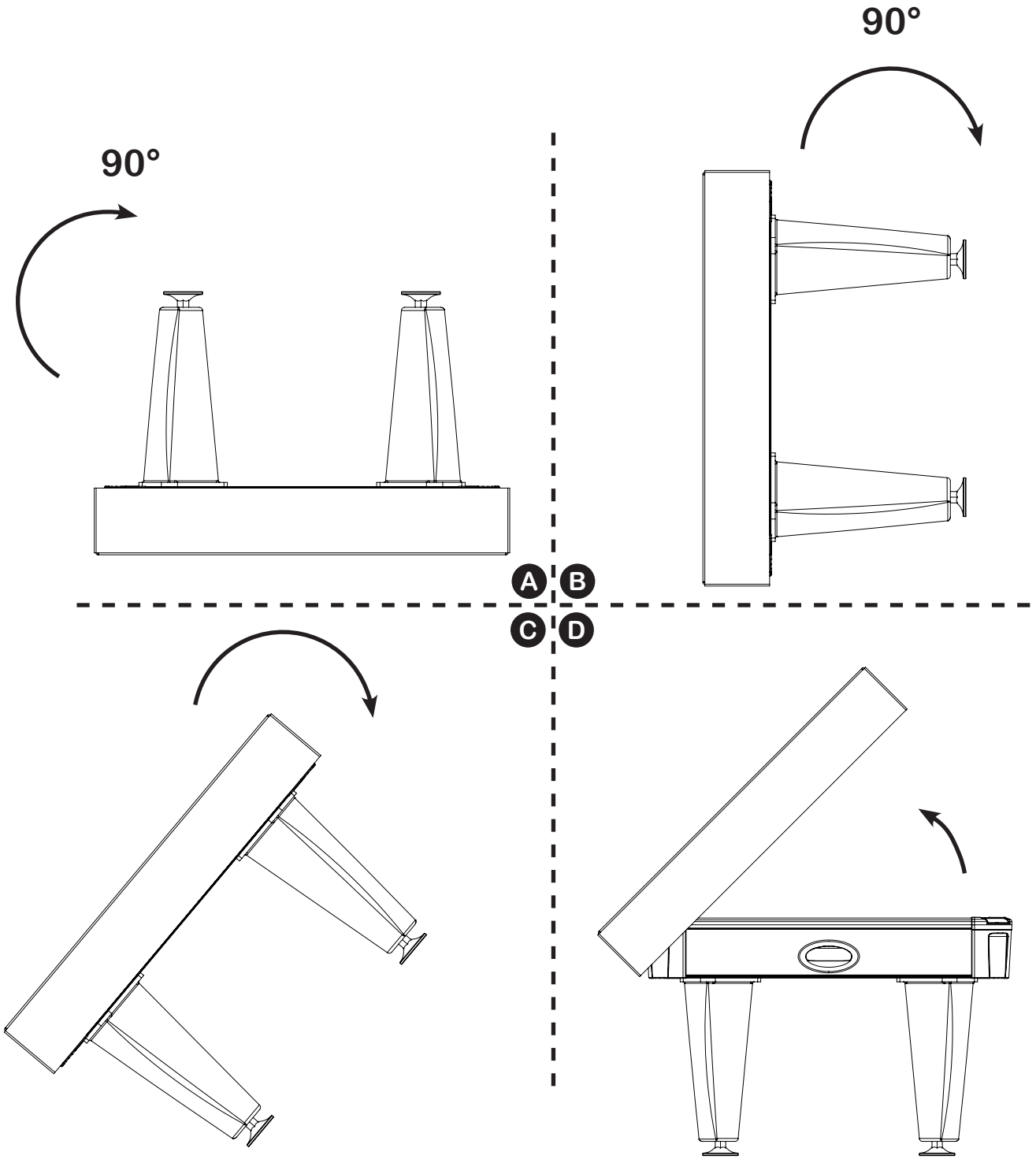

STEP 5

Ⓐ 完成後 , 旋轉螺絲座 , 調整機台高度

Ⓑ 腳座調整完成後 , 將記分器插頭對接到機台上 , 必須確認插頭對接緊密

Ⓒ 接線完成後 , 從計分器後面用六角板手將兩顆六角螺絲 (M4x12) 鎖上

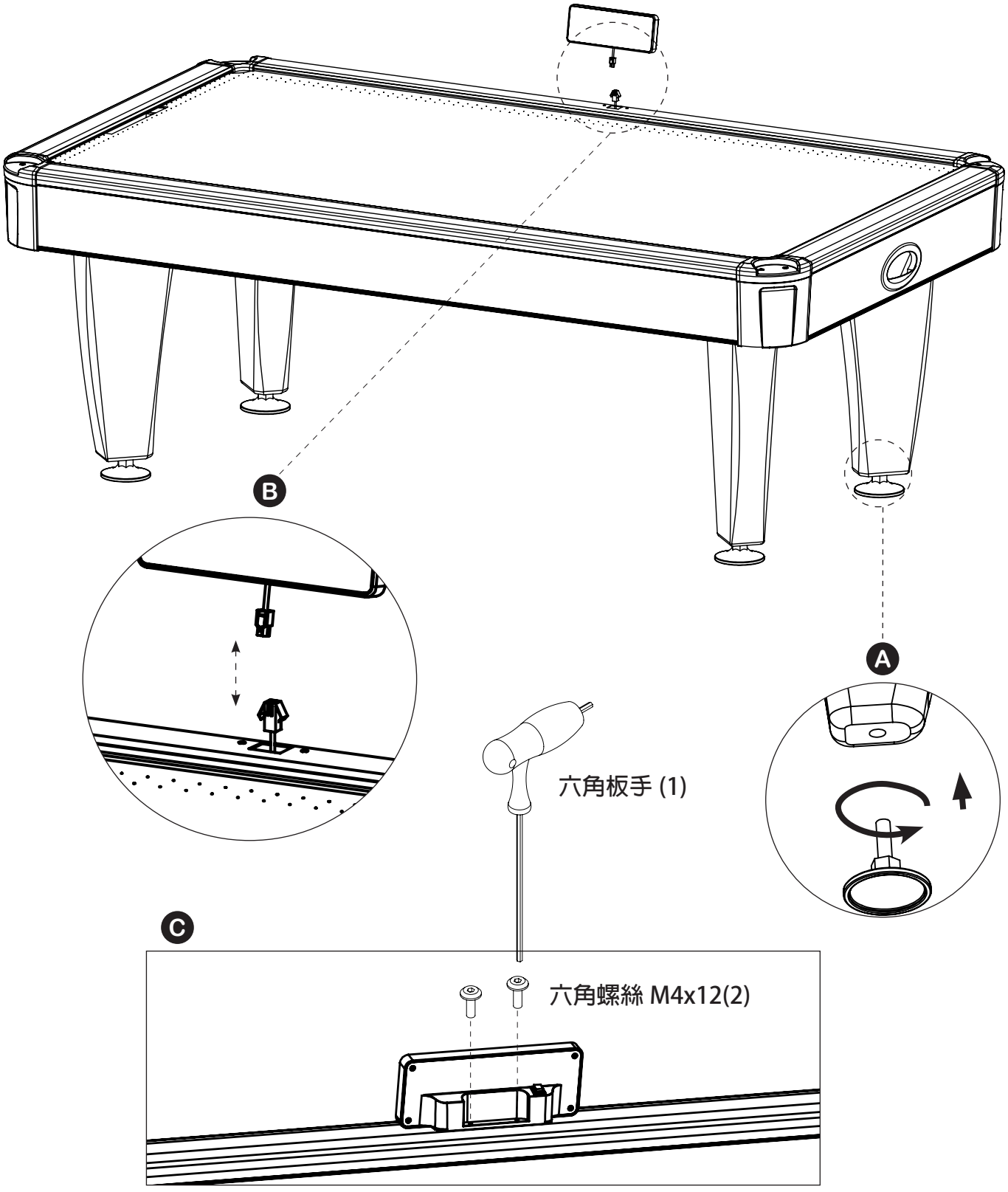

遊戲設定 & 功能介紹

底部視角

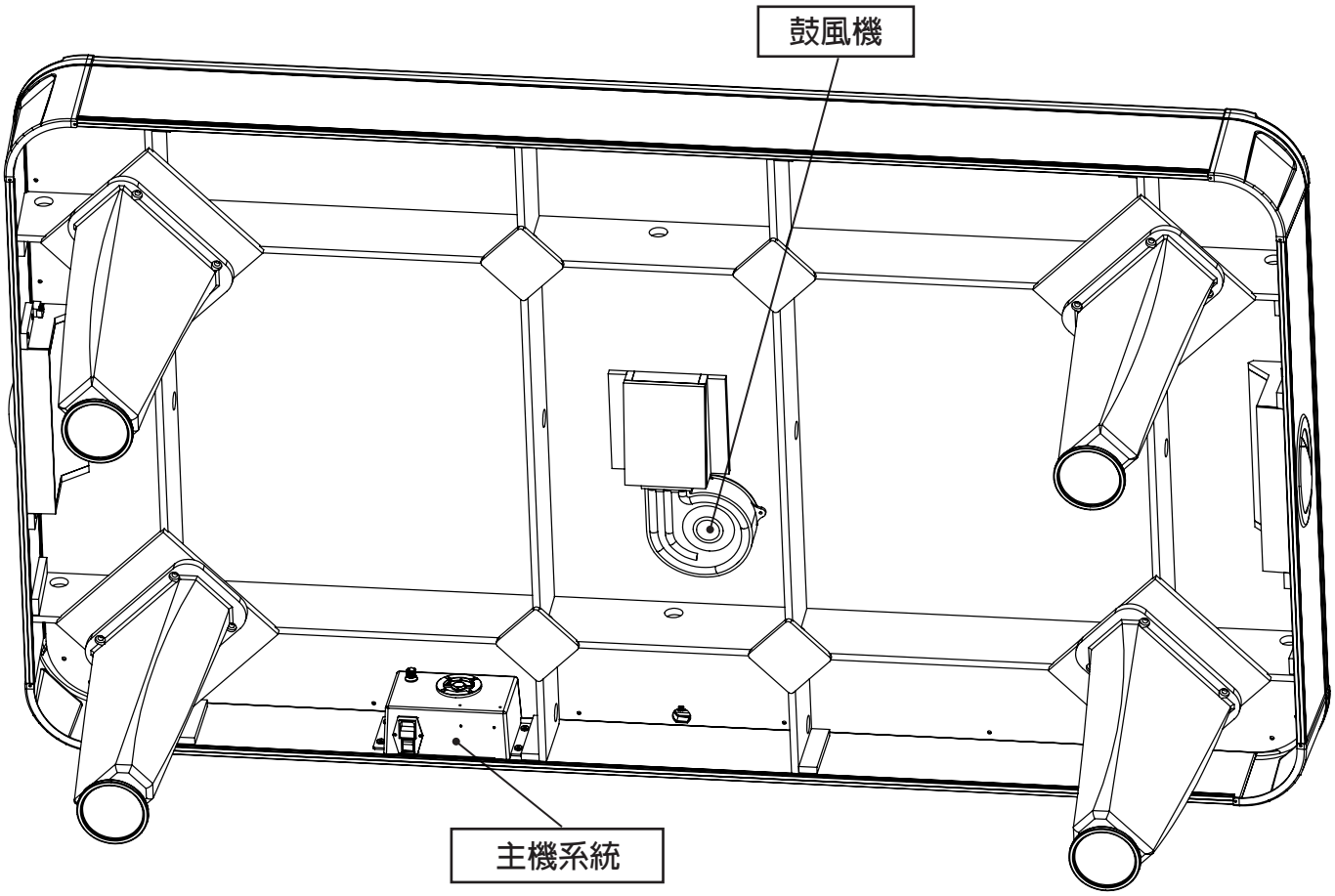

主機系統

主機系統上可以使用 " 音量調整旋鈕 " 來調整音量 , 電源開關位置為電源線插上位置 , 開關用來開機或關機。

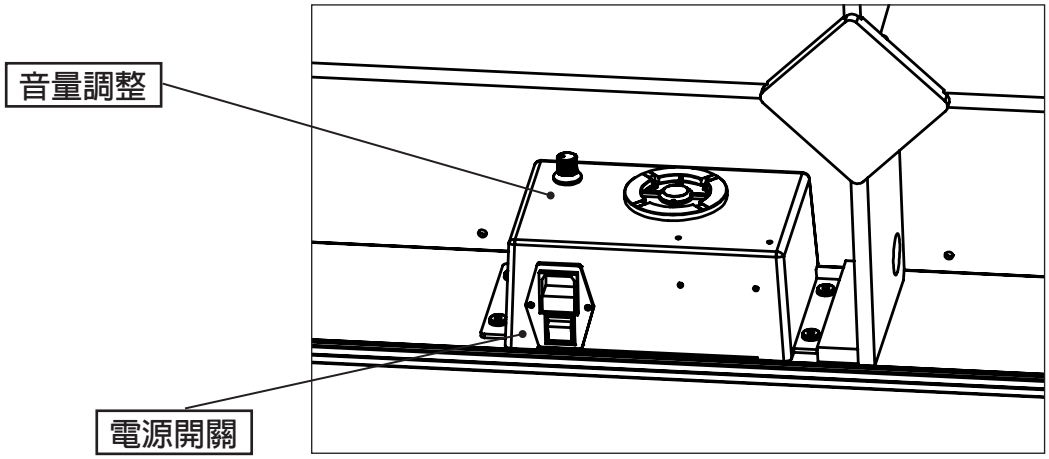

記分器設定

以下是記分器欄位說明，以及如何開始遊戲設定遊戲時間來對機台進行設置。

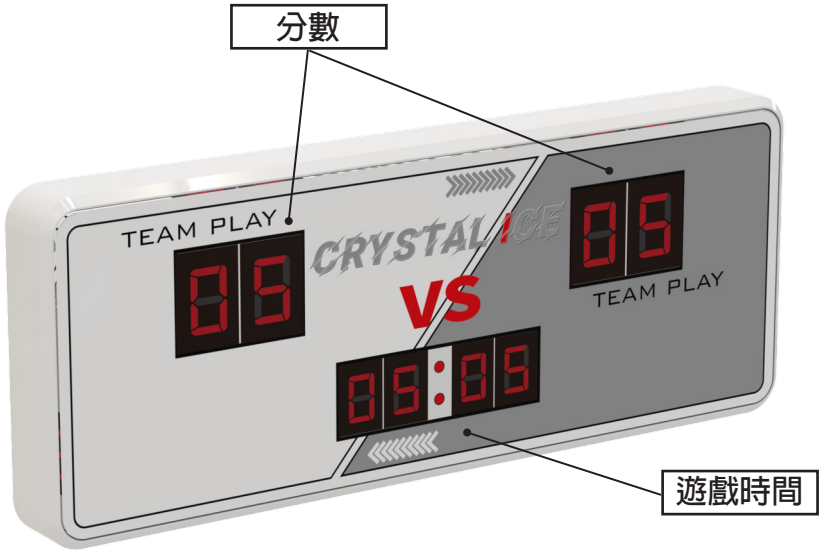

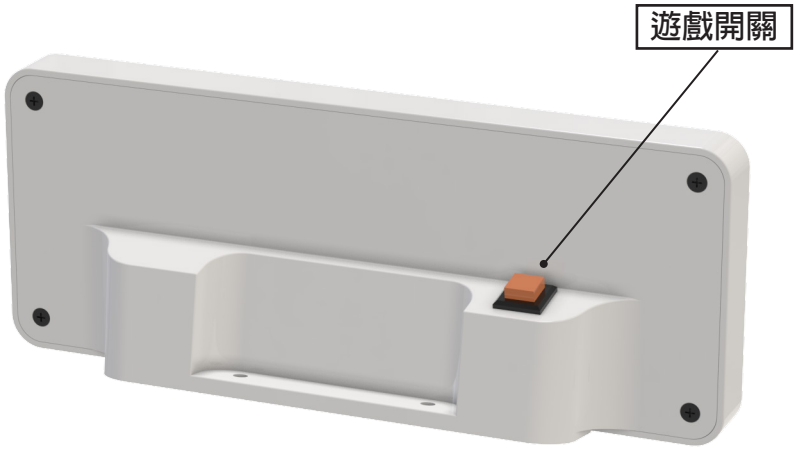

遊戲設定

機台電源打開之後記分器顯示會亮起，此時機台已經進入待機狀態，如果要開始遊戲就到記分器的後方 " 遊戲開關 " 按鈕，按一下之後遊戲將會開始 (桌面出風) 並且時間會顯示 3 分鐘遊戲時間，如果再按一下就會加上 3 分鐘變 6 分鐘遊戲時間以此類推 (每按一次就加 3 分鐘), 如果要遊戲結束需要等遊戲時間結束 (或是直接關電源開關)。

使用時注意事項

1. 使用電源插座時，注意勿超過負荷量，以免發生短路或電線走火．

2. 所有電線務必安全固定擺放妥當以防絆倒或踩到．

3. 此產品屬電遊戲桌，請勿讓八歲以下孩童接觸電源插頭，所有電子產品正在運作中，必須有成人事先警告，並監督以減低危險．

4. 平時桌面應保持清潔避免灰塵紙屑或小雜物附著於球台上．

5. 球台面請避免使用尖銳性物體以免刮傷．

6. 遊戲中當球置於桌面上時，若球不會自行移動，請更換新球以增加球的滑動速度．

7. PI 若球在桌面移動至某一定點便停止或速度變慢，請檢查桌面之氣孔是否賭塞．

8. 如在操作中，發現以下問題，請勿自行修理，請立即連絡相關電器人員前往維修．
   - 風扇馬達運轉有問題．
   - 電源線或插頭發生異狀．
   - 液體潑倒桌面或發現風扇馬達有異物．
   - 風扇馬達運轉發生異常聲音．

9. 請隨時檢測此產品，如發生異常請立即停止使用，並請洽詢合格服務人員修理，以防發生危險．

10. 遇地面不停坦時，可依實際情況調整腳架螺絲座使其保持水平．

11. 搬運放置時應盡量避免激烈震動．

12. 本機台若放置屋外，必須避免陽光直射的狀況發生．

13. 本機台若放置地下室或特殊場所，必須避免有濕氣的情況發生．

清潔方式

1. 擦拭桌面時，應盡量避免用水或濕布直接擦拭．

2. 可定期用蠟油保養桌面，以保持台面光滑亮麗．

3. 桌面風孔有阻塞時，可拿細針將風孔清通．

4. 計分螢幕須保持乾淨清楚，可拿布擦拭．

5. 扶手鋁跟機台外觀，可用打完桌蠟的布擦拭．

Innovation.Service.Cooperation

FB

WEB

YUAN GONG

http://www.yg-web.com.tw

info@yg-web.com.tw

+886-7-7324520

+886-7-7328875

高雄市鳥松區中正路46巷一弄45號

No. 45, Aly. 1, Ln. 46, Zhongzheng Rd.,
Niaosong Dist., Kaohsiung City 833, Taiwan (R.O.C.)